Chair:
Roberta Thompson

Commissioners:
Brent Bartel
Angela Hames
Andy Holewa
Phillip Neururer
Clayton Zimmerman
Steven Jones

Council Liaison:
David Grant
(Mayor)

ARDEN HILLS

Planning Commission
January 6, 2016
6:30 p.m.
City Hall

Address:
1245 W Highway 96
Arden Hills MN 55112

Phone:
651-792-7800

Website:
www.cityofardenhills.org

City Vision

Arden Hills is a strong community that values its unique environmental setting, strong residential neighborhoods, vital business community, well-maintained infrastructure, fiscal soundness, and our long-standing tradition as a desirable City in which to live, work, and play.

Agenda

CALL TO ORDER

1. APPROVAL OF THE AGENDA

2. APPROVAL OF MINUTES

   2.A. December 9, 2015, Planning Commission Regular Meeting

   Documents: 12-09-15PC.PDF

   2.B. December 9, 2015, Planning Commission Work Session Meeting

   Documents: 12-09-15PCWS.PDF

3. PLANNING CASES

   3.A. Planning Case 15-025 - CUP Amendment - Antenna Extension - AT&T Wireless (Public Hearing Required)

   Prepared By Matthew Bachler, Associate Planner

   Documents: MEMO.PDF, ATTACHMENT A.PDF, ATTACHMENT B.PDF, ATTACHMENT C.PDF, ATTACHMENT D.PDF

4. COMMENTS AND REPORTS

   4.A. REPORT FROM THE CITY COUNCIL

Prepared By Matthew Bachler, Associate Planner

Documents: 01-06-16 - REPORT FROM THE CITY COUNCIL.PDF

4.B. COMMISSION COMMENTS & REQUESTS

4.C. STAFF COMMENTS

ADJOURN

A quorum of the City Council may be present at this meeting.

DRAFT

Approved: January 6, 2016

CITY OF ARDEN HILLS, MINNESOTA
PLANNING COMMISSION
WEDNESDAY, DECEMBER 9, 2015
6:30 P.M. - ARDEN HILLS CITY HALL

CALL TO ORDER/ROLL CALL

Pursuant to due call and notice thereof, Chair Roberta Thompson called to order the regular Planning Commission meeting at 6:30 p.m.

ROLL CALL

Present were: Chair Roberta Thompson, Commissioners Angela Hames, Andrew Holewa, Steven Jones, Phillip Neururer (arrived at 6:35 p.m.), and Clayton Zimmerman.

Absent: Commissioner Brent Bartel.

Also present were: Community Development Director Jill Hutmacher; City Planner Ryan Streff; Associate Planner Matthew Bachler; and Councilmember Fran Holmes.

APPROVAL OF AGENDA – DECEMBER 9, 2015

Chair Thompson stated the agenda will stand as published.

APPROVAL OF MINUTES

November 4, 2015 – Planning Commission Regular Meeting

Commissioner Holewa moved, seconded by Commissioner Jones, to approve the November 4, 2015, Planning Commission Regular Meeting as presented. The motion carried unanimously (5-0).

PLANNING CASES

A. Planning Case 15-023; Subdivision Code Amendment – Public Use Dedications – *Public Hearing Required*

Associate Planner Bachler stated that development results in new residents and employees that have an impact on a community's existing public infrastructure, such as streets, utilities, and parks. Minnesota State law authorizes cities to require as part of a subdivision approval that a reasonable portion of buildable land be dedicated to the public or preserved for public use

specifically for parks, recreational facilities, playgrounds, trails, wetlands, or open space. The City's current public use dedication requirements are found in Chapter 11 – Subdivisions, Section 1130.08 of the Arden Hills City Code.

Associate Planner Bachler explained that with the pending redevelopment of the former Twin Cities Army Ammunition Plant (TCAAP) site, City staff has been working with the City Attorney to update the public use dedication requirements to ensure that sufficient resources will be available for park development on TCAAP. Additionally, the update to the ordinance is meant to clarify park dedication requirements throughout the City and to affirm that these requirements may apply to redevelopment or reuse projects as well.

Associate Planner Bachler indicated that the City Council reviewed the proposed amendment to Section 1130.08 at their Work Session on November 16, 2015. City staff presented a summary of the revisions to the park dedication ordinance, which would be updated to include two requirements for subdivision approval: a land dedication requirement and a park development fee. The land dedication requirement would allow the city to acquire land for park, trail, and open space purposes. The park development fee would enable to the City to collect fees to be used for park development and improvements.

Associate Planner Bachler explained that the City's financial advisor, Stacie Kvilvang, Ehlers and Associates, also provided an analysis of the estimated costs for park acquisition and development on TCAAP at the Work Session. The City Council and Ms. Kvilvang discussed the appropriate park development fee amount to ensure sufficient funds would be available to develop the parks and open spaces shown on the TCAAP Regulating Plan.

Associate Planner Bachler provided the Findings of Fact for review:

1. The proposed amendment advances the land use goals in the City's Comprehensive Plan by ensuring a balanced mix of residential, park, open space, and commercial land uses are provided in the City.
2. The proposed amendment advances the parks and recreation goals in the City's Comprehensive Plan by supporting the development of a system of neighborhood parks and pathways that are safe and engaging.
3. The proposed amendment advances the parks and recreation goals in the City's Comprehensive Plan by supporting the protection of access to lakes, marshes, and wooded areas for active and passive recreation.
4. The proposed amendment advances the parks and recreation goals in the City's Comprehensive Plan by establishing financing and funding options to improve and expand the City's parks and recreation system.

Associate Planner Bachler stated that staff recommends approval of Planning Case 15-023 to amend Section 1130.08 of the City Subdivision Code pertaining to public use dedications, as presented in the December 9, 2015, report to the Planning Commission

Associate Planner Bachler reviewed the options available to the Planning Commission on this matter:

1. Recommend Approval as Submitted.
2. Recommend Approval with Changes.
3. Recommend Denial
4. Table

Chair Thompson opened the floor to Commissioner comments.

Commissioner Holewa asked if the term "commercial" referred to all non-residential subdivisions.

Associate Planner Bachler stated that this was the case.

Commissioner Holewa suggested that the term "commercial" be changed to "non-residential" as this was a more broad term and would cover government uses such as a post office or library.

Associate Planner Bachler indicated that staff could discuss this further with the City Attorney.

Commissioner Holewa questioned if park dedication requirements would be reduced for projects that included affordable housing.

Associate Planner Bachler reported that a reduction in the park dedication requirements for affordable housing was not included in the proposed Ordinance.

Commissioner Holewa inquired about the park dedication requirements for redevelopment projects.

Community Development Director Hutmacher discussed the language within the proposed Ordinance that applied to redevelopment projects and their associated park dedication requirements.

Commissioner Holewa suggested that staff review the references to the "City" and the "City Council" within the Ordinance and whether these references should be consistent.

Commissioner Holewa questioned whether the City could require private developers to provide public trail connections to regional trails not owned by the City.

Commissioner Holewa inquired where a developer would be able to find information on the residential park development fee amount.

Associate Planner Bachler noted that the park development fee would be included in the City's Fee Schedule. The Fee Schedule is available on the City's website.

Commissioner Holewa suggested that the proposed Ordinance state where the park development fee has been adopted.

Commissioner Zimmerman asked if there would be sufficient funding available to develop the neighborhood parks that will be dedicated on the TCAAP site.

Associate Planner Bachler explained that developers would be charged a park development fee that could be used for capital improvements for the neighborhood park facilities on TCAAP.

Community Development Director Hutmacher discussed how the City and its financial advisor completed an analysis to ensure that sufficient land would be set aside for parks, whether it was dedicated to the City by developers or had to be purchased using the fees charged in lieu of the park dedication requirement. She reported that the proposed Ordinance allows the City to require a developer to satisfy the park dedication requirements or pay the park development fee, or both of these, based on the City's discretion. She added that staff has worked closely with the City Attorney on the language included in the Ordinance.

Councilmember Holmes believed that the current language was slightly unclear and that staff should perhaps clarify if land or cash would be sought for residential developments.

Community Development Director Hutmacher reiterated that the requirements for park dedication and park development fees would be at the City's discretion. She described several different development scenarios and explained which request the City could make in each scenario.

Commissioner Hames anticipated that developers would work through these issues with staff and would understand the proposed Ordinance clearly.

Community Development Director Hutmacher reported that staff reviewed park dedication ordinances adopted by several other cities and that the proposed regulations were consistent with other cities. She did not believe the language would be new to developers.

Chair Thompson agreed that developers would work with staff in order to find clarity and understanding on the City's required park dedication and park development fees.

Commissioner Jones asked if a multi-use building would be charged separate rates for its residential and commercial space.

Community Development Director Hutmacher stated this was the case and that the fees would be prorated based on the percentage of each use.

Commissioner Holewa asked if the proposed Ordinance had been brought to the JDA.

Community Development Director Hutmacher indicated that the proposed Ordinance was discussed in general, but noted this was a City-wide policy that did not require JDA approval.

Chair Thompson opened the public hearing at 7:15 p.m.

Chair Thompson invited anyone for or against the application to come forward and make comment.

There being no comment Chair Thompson closed the public hearing at 7:16 p.m.

Commissioner Holewa moved and Commissioner Neururer seconded a motion to recommend approval of Planning Case 15-023 to amend Section 1130.08 of the City Subdivision Code pertaining to public use dedications, as presented in the December 9, 2015, report to the Planning Commission. The motion carried 5-1 (Zimmerman opposed).

UNFINISHED AND NEW BUSINESS

None.

COMMENTS AND REPORTS

A. Report from the City Council

Councilmember Holmes updated the Planning Commission on City Council activities from the November 30, 2015, Regular Meeting, stating the City Council approved Ordinance Number 2015-010 (Planning Case 15-019) amending Section 1325.05, Subd. 8(F) of the City Code. The Ordinance clarifies the commercial and multi-family residential façade transparency requirements included in the B-2 and B-3 District Design Standards. The Planning Commission reviewed this item at their meeting on November 4, 2015, and recommended approval (5-0).

Councilmember Holmes indicated that the City Council also approved Ordinance Number 2015-011 (Planning Case 15-022) amending Section 1325.09, Subd. 4(A) of the City Code. The Ordinance clarifies that wireless antennas do not necessarily need to complement or support the principal use they are associated with and may be treated as a secondary use as well as an accessory use. The Planning Commission reviewed this item at their meeting on November 4, 2015, and recommended approval (5-0).

Councilmember Holmes reported the Council recently approved a franchise agreement with CenturyLink, which would bring competition to Comcast in the cable market. She indicated the Council would be holding a Truth in Taxation hearing on December 14th at 7:00 p.m. She then discussed the proposed tax levy. She encouraged those interested in serving as a City Council member to apply at City Hall before December 15th.

Councilmember Holmes congratulated the entire Community Development Department for receiving the Leaders in Local Government award for the City's business expansion and retention program. This award was presented to the City on November 17th by the St. Paul Chamber of Commerce.

Community Development Director Hutmacher thanked the members of the Economic Development Commission and Economic Development Authority, and other community volunteers as well, for assisting the City with its business expansion and retention efforts.

Councilmember Holmes congratulated Associate Planner Bachler for recently passing the American Institute of Certified Planners Exam. The Planning Commission congratulated Associate Planner Bachler on his achievement.

B. TCAAP Update

Community Development Director Hutmacher reported Ramsey County announced on November 13, 2015, that the TCAAP demolition and remediation project is complete, and the site has been cleaned to a residential standard.

C. Planning Commission Comments and Requests

Commissioner Holewa explained he would be continuing on the Planning Commission as an alternate member. He thanked staff for all of their assistance over the years.

Chair Thompson thanked Commissioner Holewa for his years of dedicated service to the City on the Planning Commission.

D. Staff Comments

City Planner Streff commented that the Planning Commission would meet in a Work Session directly following this meeting.

ADJOURN

Commissioner Zimmerman moved, seconded by Commissioner Hames, to adjourn the December 9, 2015, Planning Commission Meeting at 7:25 p.m. The motion carried unanimously (6-0).

DRAFT

Approved: January 6, 2016

CITY OF ARDEN HILLS, MINNESOTA
PLANNING COMMISSION
WORK SESSION
WEDNESDAY, DECEMBER 9, 2015
ARDEN HILLS CITY HALL

CALL TO ORDER/ROLL CALL

Pursuant to due call and notice thereof, Chair Roberta Thompson called to order the work session meeting at 7:30 p.m.

ROLL CALL

Present were: Chair Roberta Thompson, Commissioners Andrew Holewa, Steven Jones, Phillip Neururer, and Clayton Zimmerman.

Absent: Commissioners Brent Bartel and Angela Hames.

Also present were: Community Development Director Jill Hutmacher; City Planner Ryan Streff; Associate Planner Matthew Bachler; and Councilmember Fran Holmes.

APPROVAL OF AGENDA – DECEMBER 9, 2015

The Agenda was approved as presented.

DISCUSSION ITEMS

A. Draft 2016 Work Plan

City Planner Streff reviewed the proposed 2016 Work Plan with the Commission. It was noted that the Work Plan would be presented to the City Council at a joint meeting with the Planning Commission on Tuesday, January 19th.

Chair Thompson opened the floor to the Commission.

Commissioner Jones was interested in seeing building material requirements addressed by the Planning Commission.

Chair Thompson questioned how the City addressed new building materials within the City Code.

City Planner Streff explained that staff has the ability to evaluate new building materials and review the Code for consistency.

Chair Thompson stated that she was concerned about the alignment of commercial buildings along Lexington Avenue. She discussed how difficult it was for delivery trucks to maneuver through these sites. She wanted to ensure that appropriate delivery space was provided for new developments in the City.

Commissioner Zimmerman asked how the Planning Commission would be involved in the TCAAP development.

Community Development Director Hutmacher discussed the TCAAP development timeline and noted that all proposed developments would go before the JDA, unless the plans required adjustments to the TRC.

Commissioner Holewa requested information from staff on the solar and geothermal situation on TCAAP.

City Planner Streff provided an update to the Commission noting that Ramsey County has been in contact with the City regarding the approval process for a solar array development. He explained that staff has no further information regarding the use of geothermal on the TCAAP site.

B. 2015 Planning Commission Year-End Report

City Planner Streff provided the Planning Commission with a summary of the planning activities for 2015. The following accomplishments were discussed:

- Reviewed and processed 25 planning cases that included 38 separate land use requests.

- City approved seven Zoning or City Code amendments, with three amendments still pending, that addressed window transparency, accessory telecommunication antennas, public use dedications, outdoor display and sales, resale businesses, temporary parking, and stormwater management.

- Processed the adoption of the TCAAP Redevelopment Code, the rezoning of the 427-acre TCAAP property, and the amendment to the Arden Hills Comprehensive Plan to incorporate the TCAAP Master Plan.

Chair Thompson opened the floor to Commission questions.

Chair Thompson thanked staff for their dedication to the City and for keeping the Commission members thoroughly informed on planning issues.

Councilmember Holmes appreciated all of the Planning Commission's efforts over the past year and thanked Commissioner Holewa for his service to the City of Arden Hills.

ADJOURN

Commissioner Holewa moved, seconded by Commissioner Jones, to adjourn the December 9, 2015, Planning Commission Work Session Meeting at 7:57 p.m. The motion carried unanimously (5-0).

ARDEN HILLS

MEMORANDUM

DATE: January 6, 2015 PC Agenda Item **3.A**

TO: Planning Commission

FROM: Matthew Bachler, Associate Planner

SUBJECT: **Planning Case #15-025 – Public Hearing Required**
Applicant: FDH Velocitel (on behalf of AT&T Mobility)
Property Address: 3900 Bethel Drive
Request: Conditional Use Permit Amendment

Requested Action

The applicant has requested a Conditional Use Permit Amendment in order to extend the height of the existing wireless antenna installation on Bethel University's campus at 3900 Bethel Drive.

Background

The City approved a Conditional Use Permit (CUP) in 2010 to allow AT&T Mobility to install roof-mounted cellular antennas on the Brushaber Commons building on Bethel University's campus and to construct a 160 square foot equipment shed adjacent to the building. The CUP approval was granted in Planning Case 10-010. The existing installation includes six wireless antennas that are housed in two 12-foot tall fiberglass canisters. The canisters are designed to have the appearance of smokestacks and are located on the roof to blend in with the existing mechanical equipment.

AT&T Mobility leases the space for their equipment from Bethel University. The City does not receive any lease payments as part of this agreement.

1. Overview of Request:

FDH Velocitel on behalf of AT&T Mobility has requested a CUP Amendment to upgrade the existing wireless antenna installation on the roof of the Brushaber Commons building on Bethel University's campus. The existing six antennas would be replaced with nine new antennas to improve the provider's service coverage and capacity in this area of the City. In order to accommodate the upgrade, the mounting poles the antennas are attached to would need be

extended by two feet for proper positioning and clearance between each antenna. The antenna assembly canisters would also be extended by two feet to a new height of 63 feet above ground level. All new antennas would continue to be housed in the canisters and entirely concealed.

The applicant has provided a project narrative explaining the upgrade and the need for this work (Attachment A). The complete plan set for the upgrade project is included in Attachment C and photographs showing existing and proposed conditions are included in Attachment D.

2. Surrounding Area:

Direction	Future Land Use Plan	Zoning	Existing Land Use
North	Right-of-Way, Low Density Residential	Right-of-Way, R-1 - Single Family Residential District	Right-of-Way, Single Family Residential
South	Railroad, Low Density Residential	Railroad, R-1- Single Family Residential District	Railroad, Single Family Residential
East	Right-of-Way, Light Industrial and Office, Mixed Business	Right-of-Way, I-Flex District	Right-of-Way, Office, Industrial
West	Low Density Residential, Park and Open Space	R-1 - Single Family Residential District, Parks and Open Space District	Single Family Residential, Parks and Open Space

3. Site Data:

Future Land Use Plan:	Public and Institutional
Existing Land Use:	Institutional
Zoning:	B-1 - Limited Business District (Main Campus) R-1 - Single Family Residential (Athletic Complex)
Size:	191.32 Acres (Including athletic complex, the main campus, and part of Lake Valentine)
Topography:	Rolling terrain

Plan Evaluation

1. Section 1320 – District Provisions

A. Allowable Uses (Section 1320.05)

The existing use of the property for a wireless antenna installation is a permitted conditional accessory use in the B-1 Limited Business District. The antennas are considered an accessory use to the principal higher education use on the property.

2. Section 1325 – General Regulations

A. Antennas, Dish Antennas, and Towers (Section 1325.09)

Height (Section 1325.09, Subd 5) – Meets Requirements

The Zoning Code states that no antenna shall be mounted at a height exceeding 75 feet. The proposed upgrade to the antenna installation would extend the two canisters housing the antennas to a height of 63 feet above ground level.

Location – (Section 1325.09, Subd 6) – Meets Requirements

The location of the existing antenna installation was approved by the City in Planning Case 10-010. The proposed upgrade would not relocate the existing antenna support structures. All new antennas would continue to be housed in the two antenna assembly canisters. The location of the antennas on the roof of the Brushaber Commons building is approximately 1,185 feet from the nearest property line. The roof of the building is not visible outside the Bethel University campus.

All other location requirements are met by this application.

Screening (Section 1325.09, Subd. 7) – Meets Requirements

The Zoning Code requires antennas to be painted to match the color of the structure to which they are attached. The antennas themselves will not be visible because they are located inside of the antenna assembly canisters. The canisters will be painted to blend in with existing mechanical equipment on the roof.

3. Section 1355.04 Subd 3 – Conditional Use Permit

Section 1355.04, Subd 3 of the Arden Hills Zoning Code lists the criteria for evaluating a Conditional Use Permit. The Planning Commission should consider the effect of the proposed use upon the health, safety, convenience and general welfare of the owners and occupants of the surrounding land, in particular, and the community as a whole, in general, including but not limited to the following factors:

1. Existing and anticipated traffic and parking conditions;
2. Noise, glare, odors, vibration, smoke, dust, air pollution, heat, liquid or solid waste, and other nuisance characteristics;
3. Drainage;
4. Population density;
5. Visual and land use compatibility with uses and structures on surrounding land; adjoining land values;

6. Park dedications where applicable; and the
7. Orderly development of the neighborhood and the City within the general purpose and intent of this ordinance and the Comprehensive Development Plan for the City.

Additional Review

City Building Official
The City Building Official has noted that a final inspection of the existing antenna installation will need to be completed prior to the issuance of any building permits. The proposed upgrade project will require a separate building permit application with the City.

Findings of Fact

The Planning Commission must make a finding as to whether or not the proposed application would adversely affect the surrounding neighborhood or the community as a whole based on the aforementioned factors. Staff offers the following findings of fact for consideration:

General Findings:

1. The applicant has requested a Conditional Use Permit Amendment in order extend the height of the existing wireless antenna installation at 3900 Bethel Drive, approved in Planning Case 10-010.
2. The property at 3900 Bethel Drive is located in the B-1 - Limited Business District.
3. Cellular towers and antennas are allowed as a conditional accessory use in the B-1 District.
4. The proposed upgrade would increase the number of antennas from six (6) to nine (9).
5. The Zoning Code states that no antenna shall be mounted at a height exceeding 75 feet.
6. The proposed upgrade would increase the height of the antenna assembly canisters that house the antennas to 63 feet above ground level.
7. The antennas would be located approximately 1,185 feet from the nearest property line.
8. The antennas would be concealed inside the antenna assembly canisters, which will be painted to blend in with existing mechanical equipment on the roof.

Conditional Use Permit Evaluation Criteria:

9. The proposed plan would not have any impact on traffic or parking conditions.
10. The proposed plan will not produce any permanent noise, glare, odors, vibration, smoke, dust, air pollution, heat, liquid or solid waste, and other nuisance characteristics.
11. The proposed plan will not impact drainage.
12. The proposed plan will not impact population density.
13. The proposed antenna assembly canisters will likely only be visible from locations on Bethel University's campus and they are not anticipated to have an impact on land use compatibility with uses and structures on surrounding land or adjoining land values.
14. Park dedications are not applicable.

15. The proposed plan does not conflict with the general purpose and intent of the Zoning Code or the Comprehensive Development Plan for the City.

Staff Recommendation

Based on the submitted plans and findings of fact, staff recommends approval of Planning Case 15-025 for a Conditional Use Permit Amendment at 3900 Bethel Drive. If the Planning Commission makes a recommendation of approval for this request, staff is recommending the following five (5) conditions be included with the approval:

1. The project shall be completed in accordance with the plans submitted as amended by the conditions of approval. Any significant changes to these plans, as determined by the City Planner, shall require review and approval by the Planning Commission and City Council.
2. A building permit shall be obtained for all proposed antennas and associated equipment prior to installation.
3. A final inspection of the existing antenna installation shall be completed by the City Building Official prior to the issuance of a building permit for the new antennas and associated equipment.
4. A Conditional Use Permit drafted by the City Attorney shall be signed by Bethel University prior to the issuance of any building permits.
5. The antenna assembly canisters shall be painted to blend in with the surrounding equipment on the roof to which they are attached.

Options

1. Recommend Approval with Conditions: Motion to recommend *approval* of Planning Case 15-025 for a Conditional Use Permit Amendment at 3900 Bethel Drive, based on the findings of fact and the submitted plans, as amended by the five (5) conditions in the January 6, 2016, Report to the Planning Commission.

2. Recommend Approval as Submitted: Motion to recommend *approval* of Planning Case 15-025 for a Conditional Use Permit Amendment at 3900 Bethel Drive, based on the findings of fact and the submitted plans in the January 6, 2016, Report to the Planning Commission.

3. Recommend Denial: Motion to recommend *denial* of Planning Case 15-025 for a Conditional Use Permit Amendment at 3900 Bethel Drive based on the following findings: *findings to deny should specifically reference the reasons for denial.*

4. Table: Motion to *table* Planning Case 15-025 for a Conditional Use Permit Amendment at 3900 Bethel Drive: *a specific reason and/or information request should be included with a motion to table.*

Notice

Notice was published in the *Arden Hills/Shoreview Bulletin* on December 16, 2015, and notice was prepared by the City and mailed to residents within five hundred (500) feet of the subject property.

Public Comments

At this time the City has not received any comments from the public regarding this project.

Deadline for Agency Action

The City of Arden Hills received the completed application for this request on November 23, 2015. Pursuant to Minnesota State Statute, the City is required to act on this request by January 22, 2016, (60 days), unless the City provides the petitioner with written reasons for an additional 60-day review period.

The applicant was notified on December 22, 2015 of the City's request for an additional 60-day review period. Pursuant to Minnesota State Statute, the City must now act on this request by March 22, 2016 (120 days). The City may, with the consent of the applicant, extend the review period beyond the initial 120 days.

Attachments

A. Land Use Application and Project Narrative
B. Site Map and Aerial Maps
C. Construction Drawings Plan Set
D. Photographs – Existing and Proposed Conditions

Attachment A

ARDEN HILLS

1245 West Highway 96
Arden Hills, Minnesota 55112
Telephone (651) 792-7800
Fax (651) 634-5137
www.cityofardenhills.org

For Office Use Only	
Planning Case No.	15-025
Submittal Date	11/23/15
Application Completed Date	
Accepted by	MWB
Receipt Number	#864067, #864068
Council Decision	
Council Decision Date	

2015 LAND USE APPLICATION

Applicant Information

Applicant: FDH Velocitel on behalf of their client AT&T Mobility (LTE 2C/3C/ Shoreview/ FA: 10116081)

Address: 1701 American Blvd East Bloomington Minnesota 55425

Telephone No.: 952.944.1858 x 188 Other:

Fax No.: 952.944.1506

Email Address: Mark.Hennek@FDHVelocitel.com

Property Information

Property Owner: Bethel University

Owner Address: 3900 Bethel Drive St. Paul Minnesota 55112

Owner Telephone No. 651.638.6290 Office Other: 651.368.1539- Cell

Address of Property Involved: 3900 Bethel Drive Arden Hills Minnesota 55112

Legal Description: SW 1/4 N of railroad and NW 1/4 of Section 27, Township 30 Range 23 Ramsey County MN, Parcel I

Property ID No.: 273023240002

Type of Use: Colleges-Private

Zone: B-1 Limited Business District Property Acreage: 191.32 Acres

Type of Request

- ☐ Comprehensive Plan Amendment ($893 + $1,050 escrow)
- ☒ Conditional Use Permit or Amendment ($630; $315 for Home Occupation or if no Site Plan Review is required + $630 escrow)
- ☐ Interim Use Permit or Amendment ($630; $315 if no Site Plan Review is required + $735 escrow)
- ☐ Preliminary Plat ($630 + $26 per lot + $1,575 escrow)
- ☐ Final Plat ($525 + $26 per lot)
- ☐ Concept Planned Unit Development ($315)
- ☐ Master Planned Unit Development ($630 + $2,100 escrow)
- ☐ Final Planned Unit Development ($315 + $630 escrow)
- ☐ Planned Unit Development Amendment ($630; $315 if no Site Plan Review is required + $2,100 escrow)
- ☐ Site Plan Review ($315 + $630 escrow)
- ☐ Rezoning ($630 + $1,050 escrow)
- ☐ Zoning or City Code Amendment ($630 + $1,050 escrow)
- ☐ Minor Subdivision (lot split/consolidation) ($473 + $1,050 escrow)
- ☐ Variance (Zoning Code) ($315 + $630 escrow)
- ☐ Vacation of Easement or Right-of-Way ($420 + $630 escrow)
- ☐ Appeal of Administrative Decision ($105)
- ☐ Land Use Requests – Not Already Specified ($210)

Revised: 12-17-14

Brief Description of Request (please also include a typed, detailed letter explaining the project):

Remove all existing antenna and install (9) antenna to the existing stealth cupola structure. The stealth canisters will
need to be modified/extended 2' to accommodate the proposed stacking and positioning of the antenna on the mast
pipe. The associated equipment and RRH will be placed within the existing cupola and within the existing
shelter along with (6) additional 1 1/4" coax as represented in the construction drawings and passing structural
provided.

IMPORTANT

- Certain applications are subject to review and approval by the Rice Creek Watershed District. Contact RCWD directly at 763-398-3070 for additional information.
- The land use application fees do not cover building, sign, or other permit fees that may be required upon approval of a land use application.
- All applications will be subject to additional fees for reimbursement of consultant costs associated with filing, reviewing, and processing of application in the form of an escrow to the City.

Filing & Information Requirements

The City requests that you make a pre-application meeting with the City Planner to discuss the application process, requirements, and deadlines. Unless waived by the City Planner or Planning Commission, a certified survey of the property is required for all applications. A checklist with additional application requirements can be found at www.cityofardenhills.org/landuseapplications.

Complete/Incomplete Applications

An incomplete application will delay the processing of land use requests. The application approval time commences and an application is considered officially filed when the City Planner has received and examined the application and determined that the application is complete. A decision on whether the application is complete or incomplete shall be made within fifteen (15) working days following the submittal of the application. When the application is deemed to be "complete" it shall be placed on the agenda of the first possible Planning Commission meeting provided that all required public notices have been sent and published.

Payment of Fees

The undersigned acknowledges that she/he understands that before a land use application can be deemed complete, all required information and fees (including all deposits) must be paid to the City. If additional fees are required to cover costs incurred by the City, the City Planner has the right to require additional payment from one or more of the undersigned, who shall be jointly liable for such fees. Such expenses may include (but are not limited to) direct city payroll and overhead costs, fees paid to consultants and other professionals, and the cost of printing, mailing, and supplies. The City may withhold final action on a land use application, withhold building permits, and/or rescind prior action until all miscellaneous fees have been paid. Applicants are advised that an escrow deposit is required at the time of the submittal of the land use application to offset costs associated with the proposed project. Unused portions of an escrow are returned to the applicant upon successful implementation of an approved plan.

Notice of Meeting Attendance

In order for the Planning Commission and the City Council to consider any application, the applicant or a designated representative must be present at the scheduled meeting. If not, the matter may be tabled until the next available agenda.

Agenda Deadline and Meeting Schedule

The deadline for submittal of land use applications is required according to the schedule outlined below. There are **no exceptions.** Failure to submit all application materials by the deadline date may delay the review process. Planning Commission meetings are typically held on the first Wednesday after the first Monday of each month at 6:30 PM, though please contact City Hall to verify the meeting date and time. City Council meetings are held typically the last Monday of the same month at 7:00 PM. Meetings are held in the Council Chambers at the City of Arden Hills, 1245 West Highway 96, Arden Hills, Minnesota 55112, unless otherwise stated. Applicants are advised that additional meetings and/or workshops are scheduled when necessary upon approval of the Planning Commission.

2015 SCHEDULE *(*subject to change)*

APPLICATION DEADLINE DATE*	TENTATIVE PLANNING COMMISSION MEETING DATE* (Generally held on the first Wednesday after the first Monday at 6:30 p.m.)	TENTATIVE CITY COUNCIL MEETING DATE* (Generally held on the last Monday at 7:00 p.m.)
December 1 (2014)	January 7	January 26
January 5	February 4	February 23
February 2	March 4	March 30
March 2	April 8	April 27
April 6	May 6	May 25
May 4	June 3	June 29
June 1	July 8	July 27
July 6	August 5	August 31
August 3	September 9	September 28
September 7	October 7	October 26
October 5	November 4	November 30
November 2	December 9	December 28
December 7	January 6 (2016)	January 25 (2016)

Acknowledgement and Signature

I acknowledge that I have read all of the information listed in the City of Arden Hills Land Use Application and fully understand that I am responsible for all costs incurred by the City related to the processing of this application.

Property Owner Signature (Required) — Date: 11.23.15

Applicant Signature (If different than the property owner) — Date: 11.23.15

Please contact the City Planner at 651-792-7800
if you have any questions regarding this application.

Additional copies of this application form are available on the City's website: www.cityofardenhills.org/landuseapplications

Revised: 12-17-14

BETHEL
UNIVERSITY

DOUG GABRIELSEN
Manager Of Energy & Technical Services
Facilities Management
office 651.638.6290
douglas-gabrielsen@bethel.edu

October 23, 2015

To Whom It May Concern,

This is to inform you that Bethel University is aware of the AT&T antennae upgrade project on the roof of the Brushaber Commons building on our campus at 3900 Bethel Drive, Arden Hills, MN. We will be reviewing the completed proposed drawings before construction can begin.

Thank you,

Doug Gabrielsen

1701 American Blvd E
Suite 16
Bloomington, MN 55425

Project Narrative

November 11, 2015

Attn: Matthew Bachler
Associate Planner
City of Arden Hills
1245 West Highway 96
Arden Hills, MN 55112

RE: FA No.10116081/ Site No. MNL01417 Site Name: Shoreview / Project: LTE 2C-3C

Dear Mr. Bachler and to whom this concerns,

This letter is to inform you that New Cingular Wireless PCS, LLC (d.b.a., AT&T Mobility) is in the process of making enhancements to its wireless communications facility at 3900 Bethel Drive Arden Hills, Minnesota 55112. As requested by the City of Arden Hills a summary of the proposed build is necessary to obtain zoning and permitting approval by the City.

AT&T is proposing to remove the existing antenna that are located under a stealth (12') twelve foot fiberglass canister, as represented in the Rev B Construction Drawings dated 11-05-15 and the Photo Sims dated 11-05-15. New Cingular Wireless PCS LLC will be installing (9) SBNHH-1D65A antenna to replace the existing Kathrein 80010764, as to obtain the necessary capacity and coverage that is demanded by the consumer. The proposed associated equipment will be mounted inside the cupola and inside the shelter as represented in the Structural dated 11-04-15.

In order to mount the (9) SBNHH-1D65A antenna the mast pipe will need to be extended (2') two feet as to allow for proper positioning to reduce interference, accurate clearance and suitable cable connection. The SBNHH-1D65A is 55.6" or 4' 7 ½" antenna, which will be positioned in a stacked configuration, as represented in the construction drawings provided. There is a (1') one foot separation needed between the cupola, as well between stacked antennas to reduce interference. The (1') one foot separation will allow for the bending of the cable distribution to obtain proper cable port connections from the antenna to the associated equipment within the cupola. Due to the separation, the antenna positioning/placement within (lower antenna centerline (CL) is 52' and the upper antenna centerline is 59') the stealth smoke stake the canisters will need to be extended (2') two feet to meet the necessary distance needed to stack the antenna and allow for complete functionality of the system, rather than adding additional canisters or expanding the site further.

In conclusion the mast pipe and the canisters will need to be extended by 2' as to allow for the complete functionality of the cell site to obtain the coverage demands by the market and their consumers. We very much appreciate your assistance in the continuing operation of this wireless communication facility. Thank you for your attention to this matter and if you require further information or if you have any questions, please feel free to contact me at 952.944.1858 x 188 or at Mark.Hennek@FDHVelocitel.com

Sincerely,
Mark Hennek
Velocitel, Inc. on behalf of AT&T
1701 American Blvd East
Bloomington, MN 55425

MapRamsey

3900 Bethel Drive

Attachment B

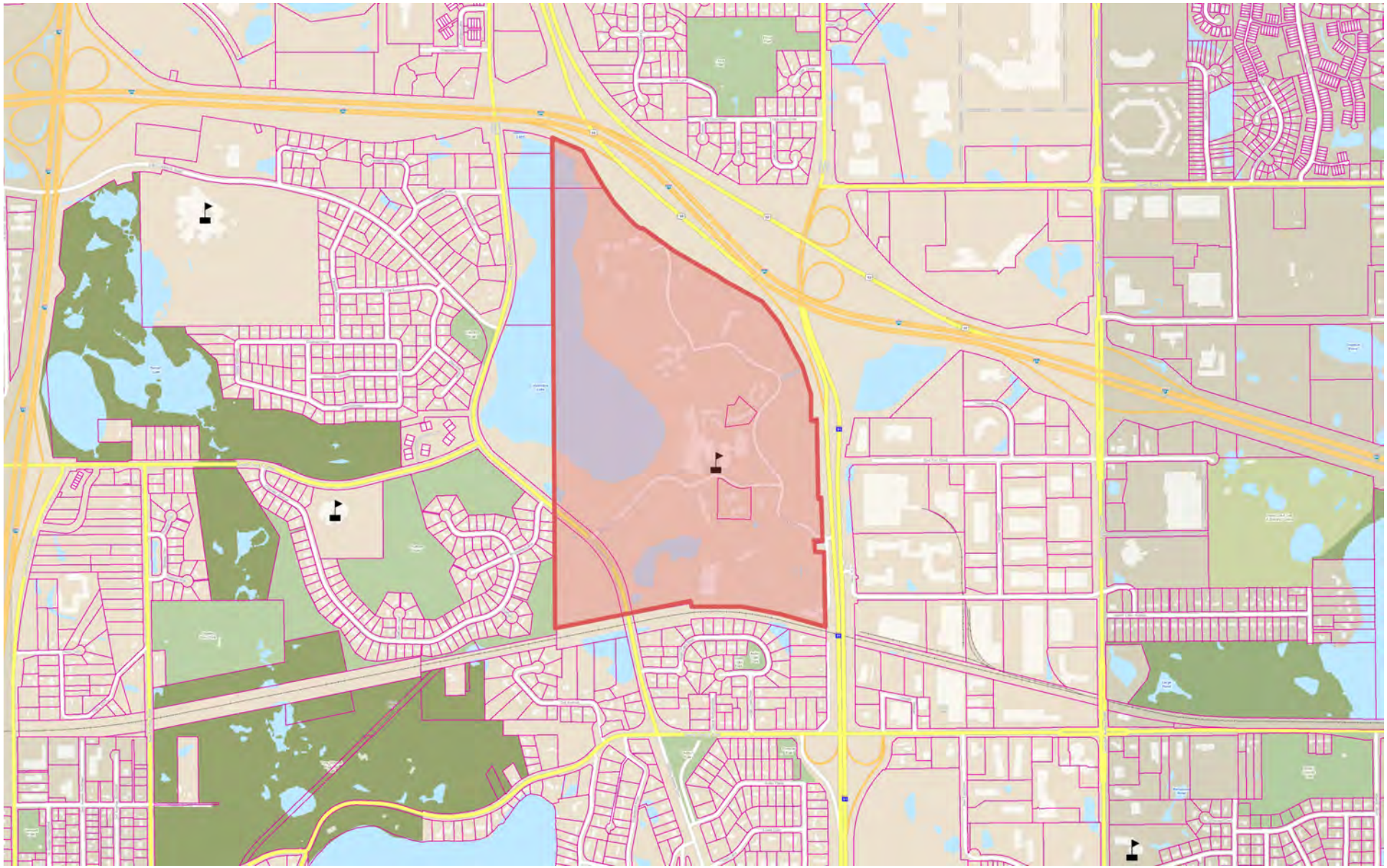

2,666.7 0 1,333.33 2,666.7 Feet

NAD_1983_HARN_Adj_MN_Ramsey_Feet

© Ramsey County Enterprise GIS

This map is a user generated static output from an Internet mapping site and is for reference only. Data layers that appear on this map may or may not be accurate, current, or otherwise reliable.
THIS MAP IS NOT TO BE USED FOR NAVIGATION

1: 16,000

Planning Case 15-025 - 3900 Bethel Drive

Map Date: December 4, 2015
P:\GIS_Data\Planning\Planning Cases\2015\PC 15-025

Property Boundary

Planning Case 15-025 - 3900 Bethel Drive

Map Date: December 15, 2015
P:\GIS_Data\Planning\Planning Cases\2015\PC 15-025

Attachment C

Antenna System Upgrade Project

- LTE 2ND/3RD CARRIER ADD
- SWAP/INSTALL ANTENNAS
- RELOCATE/ADD RRH'S
- IMPROVE QUALITY OF SERVICE

at&t MOBILITY

AT&T MOBILITY
SITE NUMBER: MNL01417
SITE NAME: SHOREVIEW - FA# 10116081
TOWER OWNER: BETHEL UNIVERSITY

SHEET	DRAWING INDEX	REV	DATE
T1	TITLE SHEET	B	11/05/15
C1	GENERAL NOTES	B	11/05/15
C2	SITE PLAN	B	11/05/15
C2.1	EQUIPMENT LAYOUT PLAN	B	11/05/15
C3	ELEVATION VIEW & RF DETAILS	B	11/05/15
C3.1	ANTENNA & CABLE CONFIGURATION	B	11/05/15
C3.2	PLUMBING DIAGRAM	B	11/05/15
C4	ANTENNA DETAILS	B	11/05/15
E1	GROUNDING & RF NOTES	B	11/05/15
E2	GROUNDING DETAILS	B	11/05/15
E2.1	GROUNDING DETAILS	B	11/05/15
E3	GROUNDING & ELECTRICAL DETAILS	B	11/05/15

DIRECTIONS:

START OUT GOING NORTHEAST ON MARQUETTE AVE TOWARD S 9TH ST.
TURN RIGHT ONTO S 4TH ST. TURN SLIGHT LEFT ONTO WASHINGTON AVE SE.
MERGE ONTO I-35W N VIA THE RAMP ON THE LEFT.
KEEP LEFT TO TAKE I-35W N. MERGE ONTO I-694 E VIA EXIT 27A.
TAKE THE MN-51 EXIT, EXIT 42B, TOWARD SNELLING AVE.
MERGE ONTO HAMLINE AVE N/MN-51/COUNTY HWY-50 VIA EXIT 42A TOWARD SNELLING AVE. TAKE THE 1ST RIGHT ONTO BETHEL DR.
3900 BETHEL DR IS ON THE LEFT.

VICINITY MAP

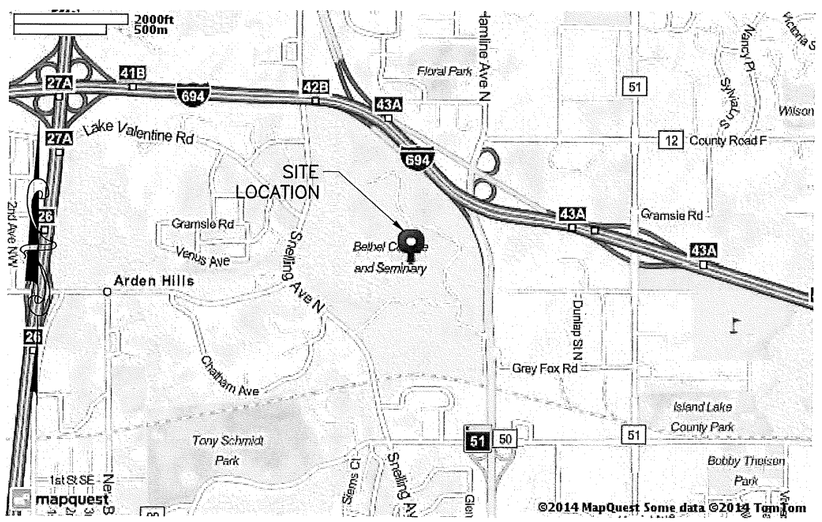

NOT TO SCALE

SCOPE OF WORK: SWAP ALL (6) EXISTING ANTENNAS. THE RELOCATION OF (3) EXISTING RRH'S. REMOVAL (6) LTE DIPLEXERS. THE INSTALLATION OF (9) LTE/UMTS/GSM ANTENNAS, (6) RRHs, AND (1) DC CABLE ON EXISTING ROOFTOP.

SITE ADDRESS: 3900 BETHEL DRIVE
ARDEN HILLS, MN 55112

OWNER: BETHEL UNIVERSITY
3900 BETHEL DRIVE
ARDEN HILLS, MN 55112

APPLICANT: AT&T MOBILITY
901 MARQUETTE AVE.
3RD FLOOR
MINNEAPOLIS, MN 55402

LATITUDE (NAD 83): 45.0588°
LONGITUDE (NAD 83): -93.1623°

CURRENT USE: TELECOMMUNICATIONS FACILITY

PROPOSED USE: TELECOMMUNICATIONS FACILITY

JURISDICTION: CITY OF ARDEN HILLS

COUNTY: RAMSEY

SITE QUALIFICATION PARTICIPANTS

	NAME	COMPANY	NUMBER
A/E	MARK ZAGAME	VELOCITEL	(770) 645-5900
SAC	MARK HENNEK	VELOCITEL	(952) 944-1858
CM	JUSTIN VICK	VELOCITEL	(651) 260-9196
PM	TOM HAMLIN	AT&T	(218) 454-0511

REVIEWED BY:

AT&T OPERATIONS DATE

VELOCITEL DATE

APPROVED BY:

OWNER DATE

JURISDICTION DATE

PRELIMINARY NOT FOR CONSTRUCTION

IT IS A VIOLATION OF LAW FOR ANY PERSON UNLESS THEY ARE ACTING UNDER THE DIRECTION OF A LICENSED PROFESSIONAL ENGINEER TO ALTER THIS DOCUMENT, UNLESS EXPLICITLY AGREED TO BY THE ENGINEER IN WRITING, THE ENGINEER DISCLAIMS ALL LIABILITY ASSOCIATED WITH THE REUSE, ALTERATION OR MODIFICATION OF THE CONTENTS HEREIN.

velocitel® complete wireless solutions
1701 AMERICAN BLVD EAST
SUITE #16
BLOOMINGTON, MN 55425
952-944-1858 (MAIN)
952-944-1506 (FAX)

at&t MOBILITY
901 MARQUETTE AVE.
3RD FLOOR
MINNEAPOLIS, MN 55402

MNL01417
SHOREVIEW
FA# 10116081
3900 BETHEL DRIVE
ARDEN HILLS, MN 55112

NO	DATE	REVISIONS	BY	CHK	APP'D
B	11/05/15	REVISED PER COMMENTS	YS	MZ	–
A	10/05/15	ISSUED FOR REVIEW	YS	MZ	–

SCALE: DESIGNED: CHECKED:

TITLE SHEET

FA #	DRAWING NUMBER	REV
10116081	T1	B

GENERAL NOTES:

1. THE PROPOSED FACILITY WILL BE UNMANNED AND DOES NOT REQUIRE POTABLE WATER OR SEWER SERVICE AND IS NOT FOR HUMAN HABITAT. (NO HANDICAP ACCESS IS REQUIRED).
2. OCCUPANCY IS LIMITED TO PERIODIC MAINTENANCE AND INSPECTION, APPROXIMATELY 2 TIMES PER MONTH, BY at&t TECHNICIANS.
3. NO NOISE, SMOKE, DUST, ODOR OR VIBRATIONS WILL RESULT FROM THIS PROPOSAL.
4. OUTDOOR STORAGE AND SOLID WASTE CONTAINERS ARE NOT PROPOSED.
5. ALL MATERIAL SHALL BE FURNISHED AND WORK SHALL BE PERFORMED IN ACCORDANCE WITH THE at&t SYSTEM GROUNDING STANDARD DATED JUNE 2011 TECHNICAL SPECIFICATION FOR CONSTRUCTION OF GSM/GPRS WIRELESS SITES, "TECHNICAL SPECIFICATION FOR FACILITY GROUNDING". IN CASE OF A CONFLICT BETWEEN THE CONSTRUCTION SPECIFICATION AND THE DRAWINGS, THE DRAWINGS SHALL GOVERN.
6. SUBCONTRACTOR SHALL BE RESPONSIBLE FOR REPAIRING ANY DAMAGE CAUSED BY THE CONSTRUCTION OPERATION.
7. SUBCONTRACTOR SHALL BE RESPONSIBLE FOR OBTAINING ALL PERMITS AND INSPECTIONS REQUIRED FOR CONSTRUCTION.
8. SUBCONTRACTOR SHALL REMOVE ALL TRASH AND DEBRIS FROM THE SITE ON A DAILY BASIS.
9. INFORMATION SHOWN ON THESE DRAWINGS WAS OBTAINED FROM SITE VISITS AND DRAWINGS PROVIDED BY THE SITE OWNER. SUBCONTRACTOR SHALL NOTIFY at&t OF ANY DISCREPANCIES PRIOR TO ORDERING MATERIAL OR PROCEEDING WITH CONSTRUCTION.
10. NO WHITE STROBIC LIGHTS ARE PERMITTED. LIGHTING, IF REQUIRED, WILL MEET FAA STANDARDS AND REQUIREMENTS.
11. ALL SIGNS SHALL BE FURNISHED AND INSTALLED AT ALL at&t WIRELESS SERVICES SITES IN ACCORDANCE WITH SPECIFICATION at&t SYSTEM GROUNDING DATED JUNE 2011.
12. NO ADDITIONAL PARKING TO BE PROPOSED. EXISTING ACCESS AND PARKING TO BE USED.
13. NO LANDSCAPING IS PROPOSED AT THIS SITE.
14.

TYPICAL MINIMUM BEND RADII		
COAX DIAMETER	ANDREW	COMMSCOPE
1/2" SUPERFLEX	1.25"	1.25"
1/2"	5"	2"
7/8"	10"	5"
1 1/4"	15"	8"
1 5/8"	20"	15"

15. ALL COAXIAL CABLE INSTALLATIONS TO FOLLOW MANUFACTURER'S INSTRUCTIONS.

GENERAL NOTES:

1. FOR THE PURPOSE OF CONSTRUCTION DRAWINGS, THE FOLLOWING DEFINITIONS SHALL APPLY:
   CONTRACTOR – CONTRACTOR
   SUBCONTRACTOR – GENERAL CONTRACTOR (CONSTRUCTION)
   OWNER – at&t WIRELESS
2. ALL SITE WORK SHALL BE COMPLETED AS INDICATED ON THE DRAWINGS AND PROJECT SPECIFICATIONS.
3. DRAWINGS PROVIDED HERE ARE NOT TO BE SCALED AND ARE INTENDED TO SHOW OUTLINE ONLY.
4. ALL MATERIALS FURNISHED AND INSTALLED SHALL BE IN STRICT ACCORDANCE WITH ALL APPLICABLE CODES, REGULATIONS, AND ORDINANCES. SUBCONTRACTOR SHALL ISSUE ALL APPROPRIATE NOTICES AND COMPLY WITH ALL LAWS, ORDINANCES, RULES, REGULATIONS, AND LAWFUL ORDERS OF ANY PUBLIC AUTHORITY REGARDING THE PERFORMANCE OF THE WORK.
5. ALL WORK CARRIED OUT SHALL COMPLY WITH ALL APPLICABLE MUNICIPAL AND UTILITY COMPANY SPECIFICATIONS AND LOCAL JURISDICTIONAL CODES, ORDINANCES AND APPLICABLE REGULATIONS.
6. UNLESS NOTED OTHERWISE, THE WORK SHALL INCLUDE FURNISHING MATERIALS, EQUIPMENT, APPURTENANCES, AND LABOR NECESSARY TO COMPLETE ALL INSTALLATIONS AS INDICATED ON THE DRAWINGS.
7. THE SUBCONTRACTOR SHALL INSTALL ALL EQUIPMENT AND MATERIALS IN ACCORDANCE WITH MANUFACTURER'S RECOMMENDATIONS UNLESS SPECIFICALLY STATED OTHERWISE.
8. IF THE SPECIFIED EQUIPMENT CANNOT BE INSTALLED AS SHOWN ON THESE DRAWINGS, THE SUBCONTRACTOR SHALL PROPOSE AN ALTERNATIVE INSTALLATION SPACE FOR APPROVAL BY THE CONTRACTOR AND SITE OWNER.
9. THE SUBCONTRACTOR SHALL PROTECT EXISTING IMPROVEMENTS, PAVEMENTS, CURBS, LANDSCAPING AND STRUCTURES. ANY DAMAGED PART SHALL BE REPAIRED AT SUBCONTRACTOR'S EXPENSE TO THE SATISFACTION OF OWNER.
10. THE SUBCONTRACTOR SHALL CONTACT UTILITY LOCATING SERVICES PRIOR TO THE START OF CONSTRUCTION.
11. ALL EXISTING ACTIVE SEWER, WATER, GAS, ELECTRIC, AND OTHER UTILITIES WHERE ENCOUNTERED IN THE WORK, SHALL BE PROTECTED AT ALL TIMES, AND WHERE REQUIRED FOR THE PROPER EXECUTION OF THE WORK, SHALL BE RELOCATED AS DIRECTED BY ENGINEERS. EXTREME CAUTION SHOULD BE USED BY THE SUBCONTRACTOR WHEN EXCAVATING OR DRILLING PIERS AROUND OR NEAR UTILITIES. SUBCONTRACTOR SHALL PROVIDE SAFETY TRAINING FOR THE WORKING CREW. THIS WILL INCLUDE BUT NOT BE LIMITED TO A) FALL PROTECTION, B) CONFINED SPACE, C) ELECTRICAL SAFETY & D) TRENCHING & EXCAVATION.
12. ALL EXISTING INACTIVE SEWER, WATER, GAS, ELECTRIC AND OTHER UTILITIES, WHICH INTERFERE WITH THE EXECUTION OF THE WORK, SHALL BE REMOVED AND/OR CAPPED, PLUGGED OR OTHERWISE DISCONTINUED AT POINTS WHICH WILL NOT INTERFERE WITH THE EXECUTION OF THE WORK, AS DIRECTED BY THE RESPONSIBLE ENGINEER, AND SUBJECT TO THE APPROVAL OF THE OWNER AND/OR LOCAL UTILITIES.
13. THE AREAS OF THE OWNER'S PROPERTY DISTURBED BY THE WORK AND NOT COVERED BY THE TOWER, EQUIPMENT OR DRIVEWAY, SHALL BE GRADED TO A UNIFORM SLOPE, AND STABILIZED TO PREVENT EROSION.
14. SUBCONTRACTOR SHALL MINIMIZE DISTURBANCE TO EXISTING SITE DURING CONSTRUCTION. EROSION CONTROL MEASURES, IF REQUIRED DURING CONSTRUCTION, SHALL BE IN CONFORMANCE WITH THE LOCAL GUIDELINES FOR EROSION AND SEDIMENT CONTROL.
15. NO FILL OR EMBANKMENT MATERIAL SHALL BE PLACED ON FROZEN GROUND. FROZEN MATERIALS, SNOW OR ICE SHALL NOT BE PLACED IN ANY FILL OR EMBANKMENT.
16. THE SUB GRADE SHALL BE COMPACTED AND BROUGHT TO A SMOOTH UNIFORM GRADE PRIOR TO FINISHED SURFACE APPLICATION.
17. THE SITE SHALL BE GRADED TO CAUSE SURFACE WATER TO FLOW AWAY FROM THE BTS EQUIPMENT.
18. IF NECESSARY, RUBBISH, STUMPS, DEBRIS, STICKS, STONES AND OTHER REFUSE SHALL BE REMOVED FROM THE SITE AND DISPOSED OF LEGALLY.
19. THE SUBCONTRACTOR SHALL PROVIDE SITE SIGNAGE IN ACCORDANCE WITH OSHA REGULATIONS.
20. SUBCONTRACTOR SHALL LEAVE PREMISES IN A CLEAN CONDITION.

STRUCTURAL STEEL NOTES:

1. ALL STEEL WORK SHALL BE PAINTED IN ACCORDANCE WITH THE PROJECT SPECIFICATIONS AND IN ACCORDANCE WITH ASTM A36 UNLESS OTHERWISE NOTED.
2. ALL WELDING SHALL BE PERFORMED USING E70XX ELECTRODES AND WELDING SHALL CONFORM TO AISC AND AWS D1.1. WHERE FILLET WELD SIZES ARE NOT SHOWN, PROVIDE THE MINIMUM SIZE PER TABLE J2.4 IN THE AISC "MANUAL OF STEEL CONSTRUCTION". PAINTED SURFACES SHALL BE TOUCHED UP.
3. BOLTED CONNECTIONS SHALL BE ASTM A325 BEARING TYPE (3/4"ø) CONNECTIONS AND SHALL HAVE MINIMUM OF TWO BOLTS UNLESS NOTED OTHERWISE.
4. NON–STRUCTURAL CONNECTIONS FOR STEEL GRATING MAY USE 5/8" DIA. ASTM A 307 BOLTS UNLESS NOTED OTHERWISE.
5. INSTALLATION OF CONCRETE EXPANSION/WEDGE ANCHOR, SHALL BE PER MANUFACTURER'S WRITTEN RECOMMENDED PROCEDURE. THE ANCHOR BOLT, DOWEL OR ROD SHALL CONFORM TO MANUFACTURER'S RECOMMENDATION FOR EMBEDMENT DEPTH OR AS SHOWN ON THE DRAWINGS. NO REBAR SHALL BE CUT WITHOUT PRIOR ENGINEERING APPROVAL WHEN DRILLING HOLES IN CONCRETE. SPECIAL INSPECTIONS, REQUIRED BY GOVERNING CODES, SHALL BE PERFORMED IN ORDER TO MAINTAIN MANUFACTURER'S MAXIMUM ALLOWABLE LOADS.
6. ALL METAL WORK SHALL BE GALVANIZED IN ACCORDANCE WITH SPECIFICATION ASTM A123. ALL SHOP WELDED MEMBERS SHALL BE GALVANIZED AFTER WELDING.

PRELIMINARY NOT FOR CONSTRUCTION

IT IS A VIOLATION OF LAW FOR ANY PERSON UNLESS THEY ARE ACTING UNDER THE DIRECTION OF A LICENSED PROFESSIONAL ENGINEER TO ALTER THIS DOCUMENT. UNLESS EXPLICITLY AGREED TO BY THE ENGINEER IN WRITING, THE ENGINEER DISCLAIMS ALL LIABILITY ASSOCIATED WITH THE REUSE, ALTERATION OR MODIFICATION OF THE CONTENTS HEREIN.

velocitel®
complete wireless solutions
1701 AMERICAN BLVD EAST
SUITE #16
BLOOMINGTON, MN 55425
952-944-1858 (MAIN)
952-944-1506 (FAX)

at&t MOBILITY
901 MARQUETTE AVE.
3RD FLOOR
MINNEAPOLIS, MN 55402

MNL01417
SHOREVIEW
FA# 10116081
3900 BETHEL DRIVE
ARDEN HILLS, MN 55112

NO.	DATE	REVISIONS	BY	CHK	APP'D
B	11/05/15	REVISED PER COMMENTS	YS	MZ	–
A	10/05/15	ISSUED FOR REVIEW	YS	MZ	–

SCALE: DESIGNED: CHECKED:

GENERAL NOTES

FA #	DRAWING NUMBER	REV
10116081	C1	B

NOTES:

THIS SITE HAS NO EXISTING WATER/SEWER LINES OR ON SITE SEWAGE FACILITIES

LIMITS OF DISTURBANCE FOR THIS PROJECT ARE = 0

BUILDING COVERAGE CALCULATIONS: NO CHANGE

IMPERVIOUS COVERAGE CALCULATIONS: NO CHANGE

PROPOSED STRUCTURAL ADDITIONS: NONE

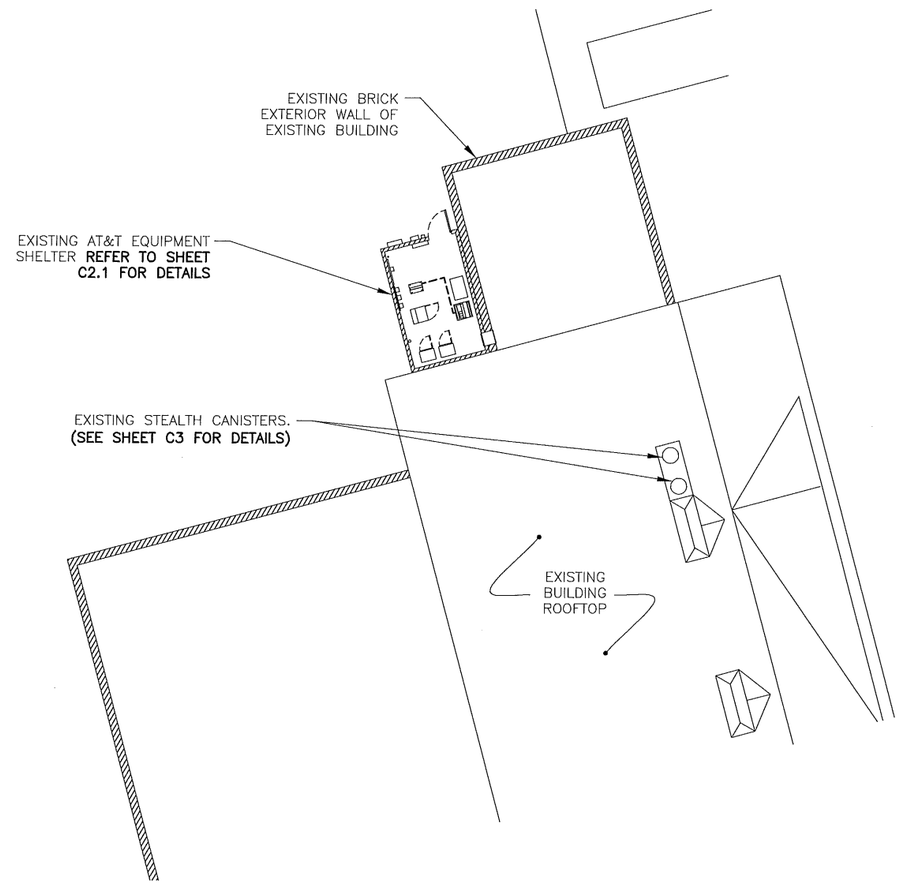

CALLED NORTH

SYMBOLS AND MATERIALS

D / SH — DETAIL REFERENCE

SECTIONS AND DETAILS

CONCRETE

EARTH

GRAVEL/STONE

SITE LEGEND

PROPERTY LINE

FENCE LINE

PP — PDU POWER CABLE

BT — BIAS "T" CABLE

PA — PDU ALARM CABLE

SITE PLAN

SCALE: 1"=20'

1

1"=20' 20 0 20

PRELIMINARY NOT FOR CONSTRUCTION

IT IS A VIOLATION OF LAW FOR ANY PERSON UNLESS THEY ARE ACTING UNDER THE DIRECTION OF A LICENSED PROFESSIONAL ENGINEER TO ALTER THIS DOCUMENT. UNLESS EXPLICITLY AGREED TO BY THE ENGINEER IN WRITING, THE ENGINEER DISCLAIMS ALL LIABILITY ASSOCIATED WITH THE REUSE, ALTERATION OR MODIFICATION OF THE CONTENTS HEREIN.

velocitel® complete wireless solutions
1701 AMERICAN BLVD EAST
SUITE #16
BLOOMINGTON, MN 55425
952-944-1858 (MAIN)
952-944-1506 (FAX)

at&t MOBILITY
901 MARQUETTE AVE.
3RD FLOOR
MINNEAPOLIS, MN 55402

MNL01417
SHOREVIEW
FA# 10116081
3900 BETHEL DRIVE
ARDEN HILLS, MN 55112

NO	DATE	REVISIONS	BY	CHK	APP'D
B	11/05/15	REVISED PER COMMENTS	YS	MZ	–
A	10/05/15	ISSUED FOR REVIEW	YS	MZ	–

SCALE: DESIGNED: CHECKED:

SITE PLAN

FA #	DRAWING NUMBER	REV
10116081	C2	B

NOTE:

EXISTING EQUIPMENT LAYOUT BASED ON INFORMATION FROM PREVIOUS PROJECTS. CONTRACTOR TO VERIFY EXISTING LAYOUT AND ORIENTATION PRIOR TO CONSTRUCTION

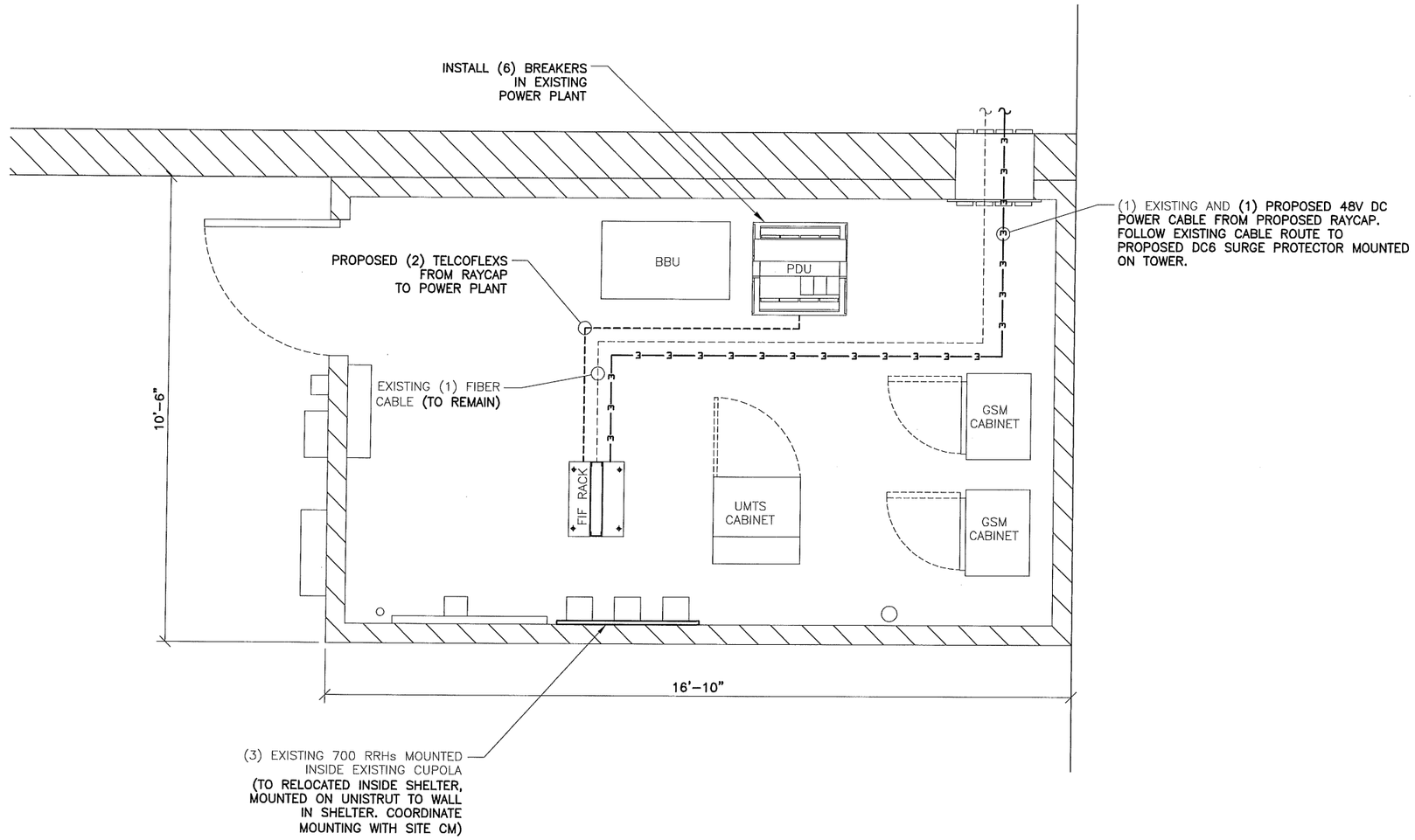

EQUIPMENT PLAN

SCALE: 1"=3'

1

1"=3' 3 0 3

CALLED NORTH

SYMBOLS AND MATERIALS

- D / SH — DETAIL REFERENCE
- SECTIONS AND DETAILS
- CONCRETE
- EARTH
- GRAVEL/STONE

SITE LEGEND

- PROPERTY LINE
- FENCE LINE
- PP — PDU POWER CABLE
- BT — BIAS "T" CABLE
- PA — PDU ALARM CABLE

PRELIMINARY NOT FOR CONSTRUCTION

IT IS A VIOLATION OF LAW FOR ANY PERSON UNLESS THEY ARE ACTING UNDER THE DIRECTION OF A LICENSED PROFESSIONAL ENGINEER TO ALTER THIS DOCUMENT, UNLESS EXPLICITLY AGREED TO BY THE ENGINEER IN WRITING. THE ENGINEER DISCLAIMS ALL LIABILITY ASSOCIATED WITH THE REUSE, ALTERATION OR MODIFICATION OF THE CONTENTS HEREIN.

velocitel® complete wireless solutions
1701 AMERICAN BLVD EAST
SUITE #16
BLOOMINGTON, MN 55425
952-944-1858 (MAIN)
952-944-1506 (FAX)

at&t MOBILITY
901 MARQUETTE AVE.
3RD FLOOR
MINNEAPOLIS, MN 55402

MNL01417
SHOREVIEW
FA# 10116081
3900 BETHEL DRIVE
ARDEN HILLS, MN 55112

NO	DATE	REVISIONS	BY	CHK	APP'D
B	11/05/15	REVISED PER COMMENTS	YS	MZ	–
A	10/05/15	ISSUED FOR REVIEW	YS	MZ	–

SCALE: DESIGNED: CHECKED:

EQUIPMENT LAYOUT PLAN

FA #	DRAWING NUMBER	REV
10116081	C2.1	B

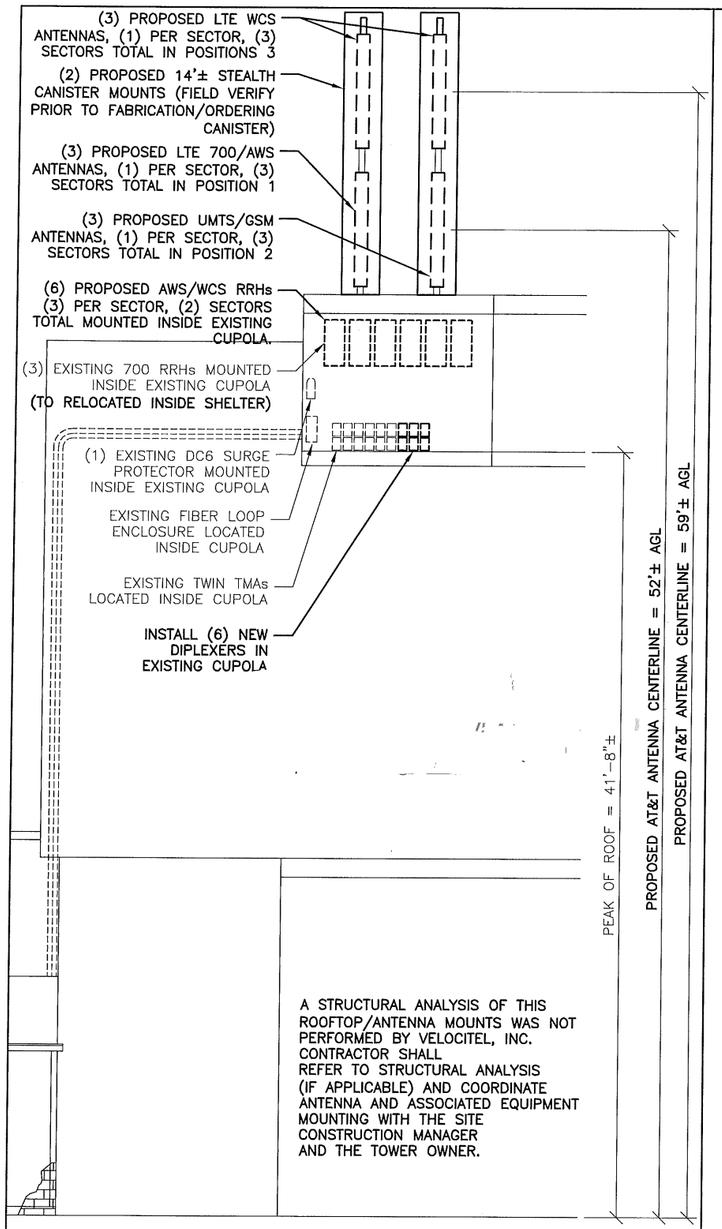

A STRUCTURAL ANALYSIS OF THIS ROOFTOP/ANTENNA MOUNTS WAS NOT PERFORMED BY VELOCITEL, INC. CONTRACTOR SHALL REFER TO STRUCTURAL ANALYSIS (IF APPLICABLE) AND COORDINATE ANTENNA AND ASSOCIATED EQUIPMENT MOUNTING WITH THE SITE CONSTRUCTION MANAGER AND THE TOWER OWNER.

PROPOSED TOWER ELEVATION | 1

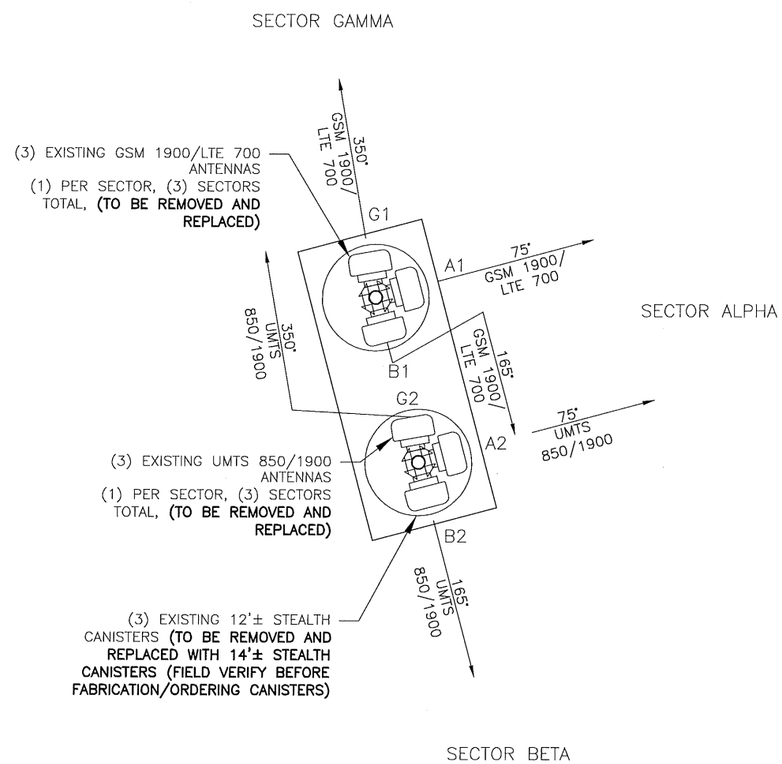

APPROXIMATE TRUE NORTH

* CONTRACTOR TO REFER TO FINAL RF CONFIGURATION PRIOR TO CONSTRUCTION.

EXISTING ANTENNA DETAIL AT 55'-0" ABOVE GRADE | 2

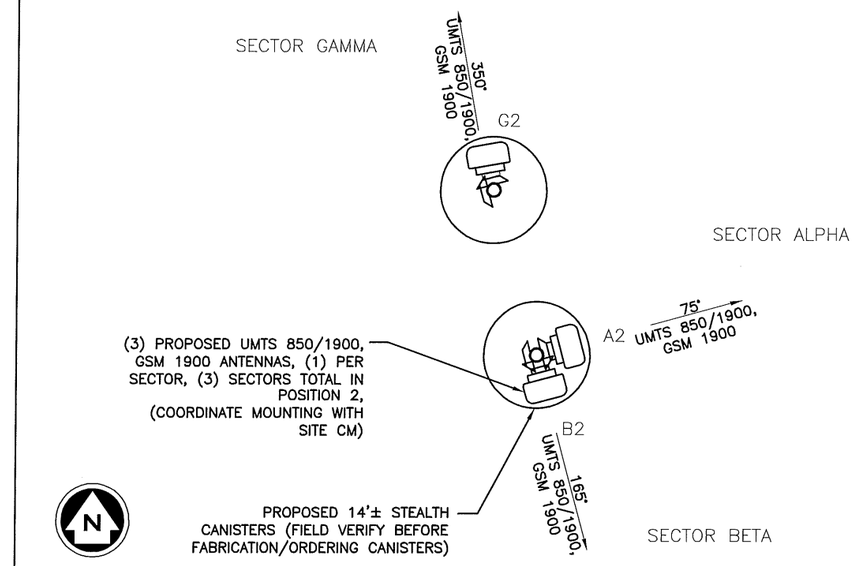

APPROXIMATE TRUE NORTH

* CONTRACTOR TO REFER TO FINAL RF CONFIGURATION PRIOR TO CONSTRUCTION.

PROPOSED ANTENNA DETAIL AT 52'-0" ABOVE GRADE | 3

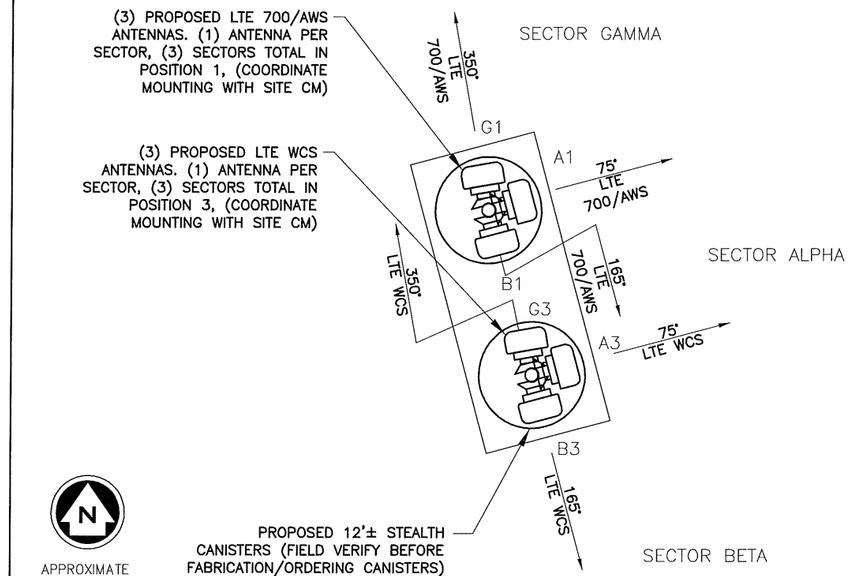

APPROXIMATE TRUE NORTH

* CONTRACTOR TO REFER TO FINAL RF CONFIGURATION PRIOR TO CONSTRUCTION.

PROPOSED ANTENNA FRAME DETAIL AT 59'-0" ABOVE GRADE | 3

PRELIMINARY NOT FOR CONSTRUCTION

IT IS A VIOLATION OF LAW FOR ANY PERSON UNLESS THEY ARE ACTING UNDER THE DIRECTION OF A LICENSED PROFESSIONAL ENGINEER TO ALTER THIS DOCUMENT, UNLESS EXPLICITLY AGREED TO BY THE ENGINEER IN WRITING. THE ENGINEER DISCLAIMS ALL LIABILITY ASSOCIATED WITH THE REUSE, ALTERATION OR MODIFICATION OF THE CONTENTS HEREIN.

velocitel®
complete wireless solutions
1701 AMERICAN BLVD EAST
SUITE #16
BLOOMINGTON, MN 55425
952-944-1858 (MAIN)
952-944-1506 (FAX)

at&t MOBILITY
901 MARQUETTE AVE.
3RD FLOOR
MINNEAPOLIS, MN 55402

MNL01417
SHOREVIEW
FA# 10116081
3900 BETHEL DRIVE
ARDEN HILLS, MN 55112

NO	DATE	REVISIONS	BY	CHK	APP'D
B	11/05/15	REVISED PER COMMENTS	YS	MZ	–
A	10/05/15	ISSUED FOR REVIEW	YS	MZ	–

SCALE: | DESIGNED: | CHECKED:

ELEVATION VIEW & RF DETAILS

FA #	DRAWING NUMBER	REV
10116081	C3	B

PROPOSED ANTENNA CONFIGURATION AND CABLE SCHEDULE

SUPPLIED BY AT&T WIRELESS, FROM RF CONFIG DATED 09/23/2015, BY CORY W THOMAS

SECTOR	POS	TECH	ANTENNA	ANTENNA ℄ HEIGHT	AZIMUTH	TMA/RRU	DC SURGE AND DISTRIBUTION	CABLE TYPE	CABLE LENGTH	DOWNTILTS
A	1	LTE 700/AWS	SBNHH-1D65A (N)	59' AGL	75°	(1) RRH2X40-07AT (IN SHELTER) (X) (1) RRH2X40-AWS+RDEM (N) (1) TT19-08BP111-001 (X)	(1) DC6-48-60-18-8F (X)	(1) FIBER (0.40") (X) (1) DC TRUNK (0.82") (X) (1) DC TRUNK (0.82") (N) (6) 1-1/4" COAX (N) (12) 7/8" COAX (X)	100' (N) *	2°/2°(E) 0°(M)
	2	UMTS 850/1900, GSM 1900	SBNHH-1D65A (N)	52' AGL	75°	(1) TT19-08BP111-001 (X)				2°/2°(E) 0°(M)
	3	LTE WCS	SBNHH-1D65A (N)	59' AGL	75°	(1) RRH4X25-WCS-4R (N)				2°/2°(E) 0°(M)
B	1	LTE 700/AWS	SBNHH-1D65A (N)	59' AGL	165°	(1) RRH2X40-07AT (IN SHELTER) (X) (1) RRH2X40-AWS+RDEM (N) (1) TT19-08BP111-001 (X)				2°/2°(E) 0°(M)
	2	UMTS 850/1900, GSM 1900	SBNHH-1D65A (N)	52' AGL	165°	(1) TT19-08BP111-001 (X)				2°/2°(E) 0°(M)
	3	LTE WCS	SBNHH-1D65A (N)	59' AGL	165°	(1) RRH4X25-WCS-4R (N)				2°/2°(E) 0°(M)
G	1	LTE 700/AWS	SBNHH-1D65A (N)	59' AGL	350°	(1) RRH2X40-07AT (IN SHELTER) (X) (1) RRH2X40-AWS+RDEM (N) (1) TT19-08BP111-001 (X)				2°/2°(E) 0°(M)
	2	UMTS 850/1900, GSM 1900	SBNHH-1D65A (N)	52' AGL	350°	(1) TT19-08BP111-001 (X)				2°/2°(E) 0°(M)
	3	LTE WCS	SBNHH-1D65A (N)	59' AGL	350°	(1) RRH4X25-WCS-4R (N)				2°/2°(E) 0°(M)

* INCLUDES SAFETY FACTOR OF 20 FT. (10 FT. AT BOTH ENDS OF CABLE RUN)

CONTRACTOR TO VERIFY RF DATA WITH AT&T WIRELESS CONSTRUCTION MANAGER AND/OR RF ENGINEER PRIOR TO INSTALLATION.

(X) = EXISTING
(XR) = EXISTING/RELOCATED
(N) = NEW INSTALL
(E) = ELECTRICAL
(M) = MECHANICAL

NOTE:
** DC POWER & FIBER JUMPER LENGTHS TO BE DETERMINED BY SITE CM

PRELIMINARY NOT FOR CONSTRUCTION

IT IS A VIOLATION OF LAW FOR ANY PERSON UNLESS THEY ARE ACTING UNDER THE DIRECTION OF A LICENSED PROFESSIONAL ENGINEER TO ALTER THIS DOCUMENT, UNLESS EXPLICITLY AGREED TO BY THE ENGINEER IN WRITING. THE ENGINEER DISCLAIMS ALL LIABILITY ASSOCIATED WITH THE REUSE, ALTERATION OR MODIFICATION OF THE CONTENTS HEREIN.

velocitel®
complete wireless solutions
1701 AMERICAN BLVD EAST
SUITE #16
BLOOMINGTON, MN 55425
952-944-1858 (MAIN)
952-944-1506 (FAX)

at&t MOBILITY
901 MARQUETTE AVE.
3RD FLOOR
MINNEAPOLIS, MN 55402

MNL01417
SHOREVIEW
FA# 10116081
3900 BETHEL DRIVE
ARDEN HILLS, MN 55112

NO	DATE	REVISIONS	BY	CHK	APP'D
B	11/05/15	REVISED PER COMMENTS	YS	MZ	–
A	10/05/15	ISSUED FOR REVIEW	YS	MZ	–

SCALE: DESIGNED: CHECKED:

ANTENNA & CABLE CONFIGURATION

FA #	DRAWING NUMBER	REV
10116081	C3.1	B

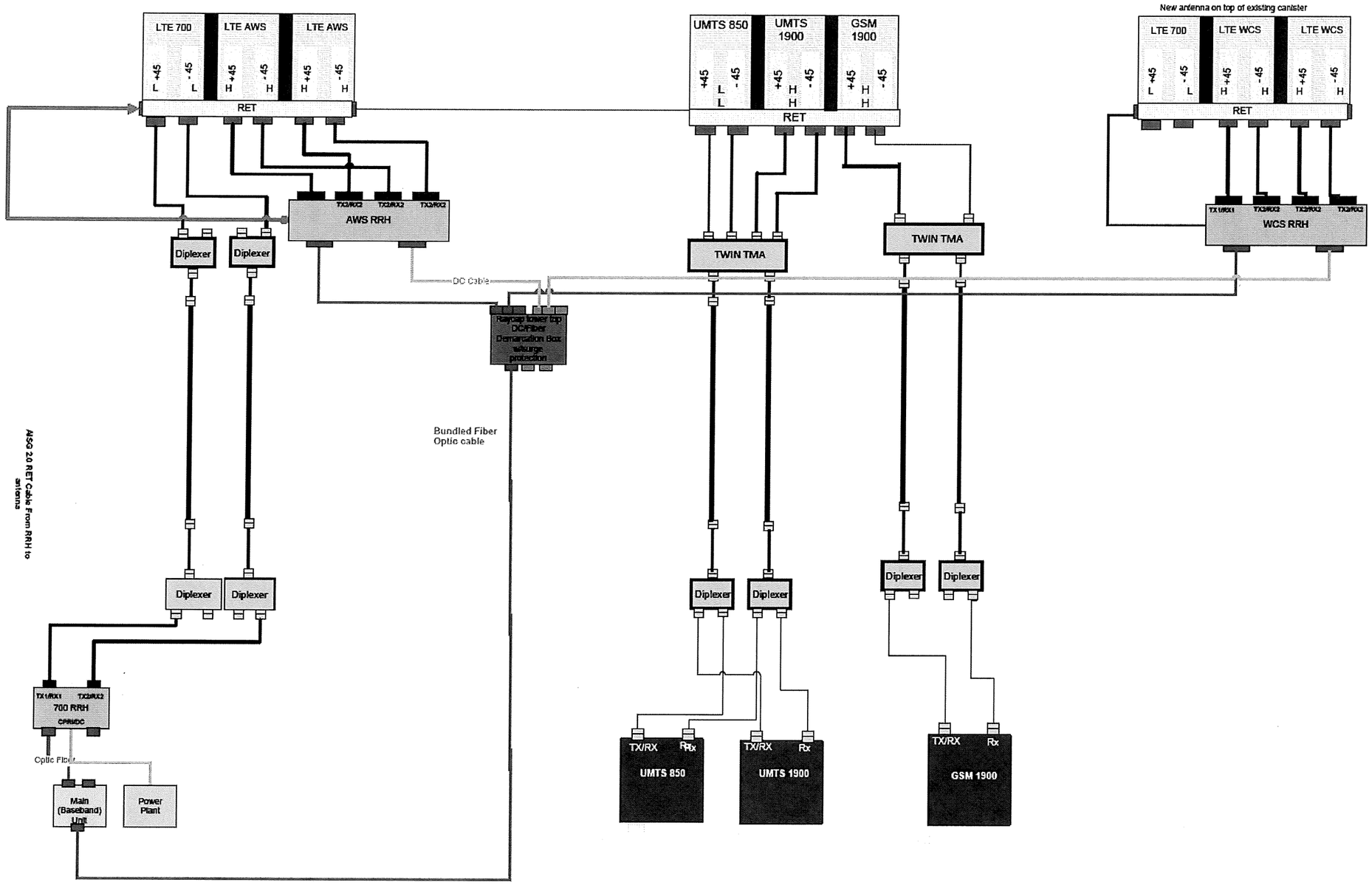

AISG 2.0 RET Cable From RRH to antenna

PRELIMINARY NOT FOR CONSTRUCTION

24"x36" SCALE: NTS
11"x17" SCALE: NTS

PLUMBING DIAGRAM | 1

velocitel®
complete wireless solutions
1701 AMERICAN BLVD EAST
SUITE #16
BLOOMINGTON, MN 55425
952-944-1858 (MAIN)
952-944-1506 (FAX)

at&t MOBILITY
901 MARQUETTE AVE.
3RD FLOOR
MINNEAPOLIS, MN 55402

MNL01417
SHOREVIEW
FA# 10116081
3900 BETHEL DRIVE
ARDEN HILLS, MN 55112

NO.	DATE	REVISIONS	BY	CHK	APP'D
B	11/05/15	REVISED PER COMMENTS	YS	MZ	–
A	10/05/15	ISSUED FOR REVIEW	YS	MZ	–

SCALE: | DESIGNED: | CHECKED:

PLUMBING DIAGRAM

FA #	DRAWING NUMBER	REV
10116081	C3.2	B

IT IS A VIOLATION OF LAW FOR ANY PERSON UNLESS THEY ARE ACTING UNDER THE DIRECTION OF A LICENSED PROFESSIONAL ENGINEER TO ALTER THIS DOCUMENT, UNLESS EXPLICITLY AGREED TO BY THE ENGINEER IN WRITING, THE ENGINEER DISCLAIMS ALL LIABILITY ASSOCIATED WITH THE REUSE, ALTERATION OR MODIFICATION OF THE CONTENTS HEREIN.

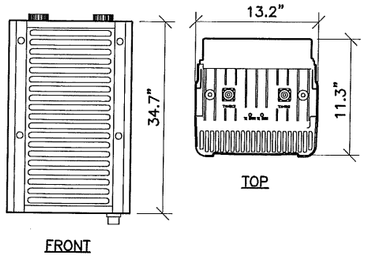

MANUFACTURER: ALCATEL–LUCENT
MODEL: RRH4x25–WCS–4R
HEIGHT: 34.7"
WIDTH: 13.2"
DEPTH: 11.3"
WEIGHT: 91 LBS

24"x36" SCALE: NTS
11"x17" SCALE: NTS

WCS RRH UNIT | 7

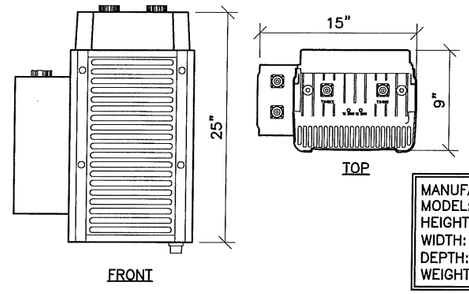

MANUFACTURER: ALCATEL–LUCENT
MODEL: RRH2x40–AWS+RDEM
HEIGHT: 25"
WIDTH: 15"
DEPTH: 9"
WEIGHT: 47.6 LBS

24"x36" SCALE: NTS
11"x17" SCALE: NTS

AWS RRH UNIT | 8

24"x36" SCALE: NTS
11"x17" SCALE: NTS

NOT USED | 5

24"x36" SCALE: NTS
11"x17" SCALE: NTS

NOT USED | 6

24"x36" SCALE: NTS
11"x17" SCALE: NTS

NOT USED | 9

24"x36" SCALE: NTS
11"x17" SCALE: NTS

NOT USED | 10

24"x36" SCALE: NTS
11"x17" SCALE: NTS

NOT USED | 1

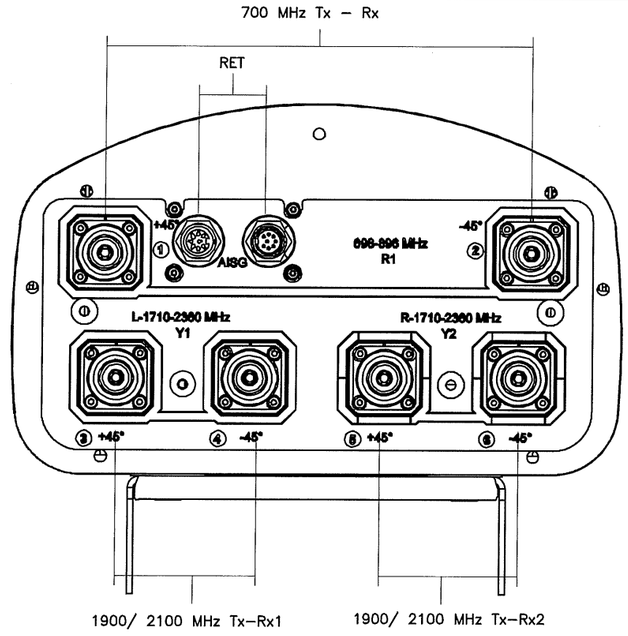

24"x36" SCALE: NTS
11"x17" SCALE: NTS

ANTENNA PORT DETAIL | 2

24"x36" SCALE: NTS
11"x17" SCALE: NTS

NOT USED | 3

MANUFACTURER: ANDREW
PART #: SBNHH–1D65A
LENGTH: 55"
WIDTH: 11.85"
DEPTH: 7.1"
WEIGHT: 40.92 lbs.

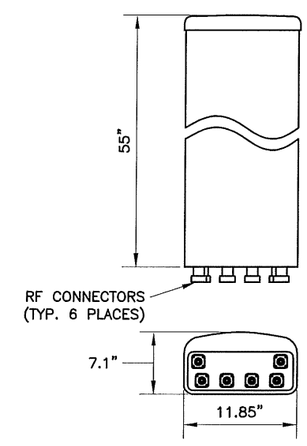

24"x36" SCALE: NTS
11"x17" SCALE: NTS

ANTENNA DETAIL | 4

PRELIMINARY NOT FOR CONSTRUCTION

IT IS A VIOLATION OF LAW FOR ANY PERSON UNLESS THEY ARE ACTING UNDER THE DIRECTION OF A LICENSED PROFESSIONAL ENGINEER TO ALTER THIS DOCUMENT, UNLESS EXPLICITLY AGREED TO BY THE ENGINEER IN WRITING. THE ENGINEER DISCLAIMS ALL LIABILITY ASSOCIATED WITH THE REUSE, ALTERATION OR MODIFICATION OF THE CONTENTS HEREIN.

velocitel®
complete wireless solutions
1701 AMERICAN BLVD EAST
SUITE #16
BLOOMINGTON, MN 55425
952-944-1858 (MAIN)
952-944-1506 (FAX)

at&t MOBILITY
901 MARQUETTE AVE.
3RD FLOOR
MINNEAPOLIS, MN 55402

MNL01417
SHOREVIEW
FA# 10116081
3900 BETHEL DRIVE
ARDEN HILLS, MN 55112

NO	DATE	REVISIONS	BY	CHK	APP'D
B	11/05/15	REVISED PER COMMENTS	YS	MZ	–
A	10/05/15	ISSUED FOR REVIEW	YS	MZ	–

SCALE: | DESIGNED: | CHECKED:

ANTENNA DETAILS

FA #	DRAWING NUMBER	REV
10116081	C4	B

GENERAL NOTES

1. INSPECTIONS

   A. GENERAL: DURING AND UPON COMPLETION OF THE WORK, ARRANGE AND PAY ALL ASSOCIATED INSPECTIONS OF ALL ELECTRICAL WORK INSTALLED UNDER THIS CONTRACT IN ACCORDANCE WITH THE CONDITIONS OF THE CONTRACT. INSTALLATION SHALL COMPLY WITH APPLICABLE LAWS AND ORDINANCES, UTILITY COMPANY REQUIREMENTS, AND THE LATEST EDITION OF NEC, NFC, NEMA, OSHA, SBC, AND UL.

   B. INSPECTIONS REQUIRED: AS PER THE LAWS AND REGULATIONS OF THE LOCAL AND/OR STATE AGENCIES HAVING JURISDICTION AT THE PROJECT SITE.

   C. INSPECTION AGENCY: APPROVED BY THE LOCAL AND/OR STATE AGENCIES HAVING JURISDICTION AT THE PROJECT SITE.

   D. CERTIFICATES: SUBMIT ALL REQUIRED INSPECTION CERTIFICATES.

2. HANGERS AND SUPPORTS

   A. MATERIALS: ALL HANGERS, SUPPORTS, FASTENERS AND HARDWARE SHALL BE STAINLESS STEEL OR OF EQUIVALENT CORROSION RESISTANCE BY TREATMENT OR INHERENT PROPERTY, AND SHALL BE MANUFACTURED PRODUCTS DESIGNED FOR THE APPLICATION. PRODUCTS FOR OUTDOOR USE SHALL BE HOT DIP GALVANIZED.

   B. TYPES: HANGERS, STRAPS, RISER SUPPORTS, CLAMPS, U-CHANNEL, THREADED RODS, ETC. AS INDICATED OR REQUIRED.

   C. INSTALLATION: RIGIDLY SUPPORT AND SECURE ALL MATERIALS, RACEWAY AND EQUIPMENT TO BUILDING STRUCTURE USING HANGERS, SUPPORTS AND FASTENERS SUITABLE FOR THE USE. MATERIALS AND LOADS ENCOUNTERED. PROVIDE ALL NECESSARY HARDWARE. PROVIDE CONDUIT SUPPORTS AT MAXIMUM 5 FT. O.C.

   D: STRUCTURAL MEMBERS: DO NOT CUT, DRILL, OR WELD ANY STRUCTURAL MEMBER EXCEPT AS SPECIFICALLY APPROVED BY THE ENGINEER.

   E. MISCELLANEOUS SUPPORTS: PROVIDE ANY ADDITIONAL STRUCTURAL SUPPORT STEEL BRACKETS, ANGLES, FASTENERS AND HARDWARE AS REQUIRED TO ADEQUATELY SUPPORT ALL ELECTRICAL MATERIALS AND EQUIPMENT.

   F. ONE HOLE STRAPS SHALL NOT BE USED FOR CONDUITS LARGER THAN 3/4 INCH.

3. ENCLOSURES

   A. NEMA 3R

4. HOLES, SLEEVES AND OPENINGS

   GENERAL: PROVIDE ALL HOLES, SLEEVES, AND OPENINGS REQUIRED FOR THE COMPLETION OF WORK AND RESTORE ALL SURFACES DAMAGED TO MATCH SURROUNDING SURFACES.

5. CUTTING AND PATCHING

   A. GENERAL: PROVIDE ALL CUTTING, DRILLING, FITTING AND PATCHING NECESSARY FOR ACCOMPLISHING THE WORK. THIS INCLUDES ANY AND ALL WORK NECESSARY TO: UNCOVER WORK TO PROVIDE FOR THE INSTALLATION OF ILL TIMED WORK, REMOVE AND REPLACE DEFECTIVE WORK AND WORK NOT CONFORMING TO THE REQUIREMENTS OF THE CONTRACT DOCUMENTS.

   B. REPAIRS: REPAIR ANY AND ALL DAMAGE TO WORK OF OTHER TRADES CAUSED BY CUTTING AND PATCHING OPERATIONS, USING SKILLED MECHANICS OF THE TRADES INVOLVED.

6. RACEWAY SYSTEMS

   A. ALL ABOVE GRADE CONDUIT AND ALL CONDUIT ELBOWS SHALL BE RIGID GALVANIZED STEEL UNLESS NOTED OTHERWISE.

7. CONDUCTORS

   USE 98% CONDUCTIVITY COPPER WITH TYPE XHHW-2 INSULATION, 600 VOLT, COLOR CODED. USE SOLID CONDUCTORS FOR WIRE UP TO AND INCLUDING NO. 8 AWG, STRANDED CONDUCTORS FOR WIRE LARGER THAN NO. 8. USE PRESSURE-TYPE INSULATED TWIST-ON CONNECTORS FOR NO. 10 AWG AND SMALLER, SOLDERLESS MECHANICAL TERMINAL LUGS FOR NO. 8 AWG AND LARGER.

8. GROUNDING SYSTEM

   A. INSTALLATION: INSTALL AS REQUIRED PER SPECIFICATION. CONTRACTOR REPRESENTATIVE WILL INSPECT EXOTHERMIC WELDS AND CONDUCT MEGGER TEST PRIOR TO BURIAL. MAXIMUM 5 OHMS RESISTANCE IS REQUIRED, WHEN MORE THAT (4) ADDITIONAL GROUNDS ARE REQUIRED, VERIFY OHM LEVEL PRIOR TO CONSTRUCTION. USE CLEAN SAND AND CLAYBACKFILL FOR BURIED GROUND CONDUCTORS.

9. CHECKOUT, TESTING AND ADJUSTING

   A. CORRECTION/REPLACEMENT: AFTER TESTING BY CONTRACTOR, OWNER OR ENGINEER, CORRECT ANY DEFICIENCIES AND REPLACE MATERIALS AND EQUIPMENT SHOWN TO BE DEFECTIVE OR UNABLE TO PERFORM AT DESIGN OR RATED CAPACITY.

   B. POWER CONDUCTORS: CONTRACTOR SHALL CONDUCT A CONTINUITY & INSULATION TEST ON CONDUCTORS BETWEEN SERVICE DISCONNECT SWITCH & POWER CABINET.

   C. WHEN SITE POWER IS DERIVED FROM 3 PHASE SOURCE, LOAD READINGS WILL BE TAKEN AND RECORDED TO MAINTAIN A BALANCED LOAD AT THE PRIMARY SOURCE. RECORDS SHALL BE TURNED IN TO THE OWNER'S REPRESENTATIVE.

RF NOTES:

1. ACTUAL LENGTHS SHALL BE DETERMINED PER SITE CONDITION BY SUBCONTRACTOR.
2. THE DESIGN IS BASED ON RF DATA SHEETS, SIGNED AND APPROVED.
3. RADIO SIGNAL CABLE AND RACEWAY SHALL COMPLY WITH THE REQUIREMENTS OF THE NATIONAL ELECTRICAL CODE (NEC, NFPA 70), CHAPTER 8.
4. ALL SPECIFIED MATERIAL FOR EACH LOCATION (E.G. OUTDOORS-OCCUPIED, INDOORS-UNOCCUPIED,PLENUMS, RISER SHAFTS, ETC.) SHALL BE APPROVED, LISTED, OR LABELED AS REQUIRED BY THE NEC.
5. RADIO SIGNAL CABLE SHALL BE SUPPORTED AT MINIMUM OF EVERY THREE (3) FEET EXCEPT INSIDE MONOPOLES OR LATTICE TOWERS WHERE CABLE AND CONNECTOR MANUFACTURER'S SUPPORT RECOMMENDATIONS SHALL BE FOLLOWED. RF JUMPERS SHALL BE SUPPORTED AT A MAXIMUM OF TWO (2) FEET, AND WITHIN 18" OF CONNECTOR. MANUFACTURER RECOMMENDED CABLE SUPPORT ACCESSORIES SHALL BE USED.
6. THE OUTDOOR CABLE SUPPORT SYSTEM SHALL BE PROVIDED WITH AN ICE SHIELD TO SUPPORT AND PROTECT ANTENNA CABLE RUNS.
7. DRIP LOOPS SHALL BE REQUIRED ON ALL OUTSIDE CABLES. CABLES SHALL BE SLOPED AWAY FROM BUILDING OR OUTDOOR BTS CABINETS TO PREVENT WATER FROM ENTERING THROUGH THE COAXIAL CABLE PORT.
8. ALL FEEDER LINE AND JUMPER CONNECTORS SHALL BE 7/16 DIN CABLE CONNECTORS THAT MEET IP68 STANDARDS.
9. 7/16 DIN CONNECTORS REQUIRE NO ADDITIONAL WEATHER PROOFING IN INDOOR APPLICATIONS IF INSTALLED AND TORQUED PROPERLY. IN OUTDOOR APPLICATIONS, WEATHER PROOFING IS REQUIRED AND THE FOLLOWING PROCEDURE SHOULD BE FOLLOWED.
10. USING WEATHERPROOFING KIT APPROVED BY CABLE MANUFACTURER AND CONTRACTOR, START TAPE APPROXIMATELY 5 INCHES FROM THE CONNECTOR AND WRAP 2 INCHES TOWARD THE CONNECTOR, THEN REVERSE THE TAPE SO THAT THE STICKY SIDE IS UP. TAPE OVER THE CONNECTOR OR SURGE ARRESTOR UNTIL THREE (3) TO FOUR (4) INCHES BEYOND THE CONNECTOR AND REVERSE AGAIN WITH THE STICKY SIDE DOWN FOR ANOTHER INCH OR TWO. ADD THE BUTYL RUBBER AND FINISH WITH A FINAL LAYER OF TAPE.
11. ANTENNAS AND COAX SHALL BE PAINTED, WHEN REQUIRED, BY THE LANDLORD OR AUTHORITY HAVING JURISDICTION IN ACCORDANCE WITH ANTENNA MANUFACTURERS' SURFACES' PREPARATION AND PAINTING REQUIREMENTS.
12. CABLE SHIELDS, AND TOWER CONDUITS SHALL BE GROUNDED AT THE TOP OF THE TOWER, WITHIN 10 FEET OF THEIR CONNECTORS, AND AT THE BOTTOM OF THE TOWER ABOUT 6 INCHES BEFORE THEY TURN TOWARD THE FACILITY. THEY SHALL BE GROUNDED AT THE MIDPOINT OF THE TOWERS THAT ARE BETWEEN 100 FEET AND 200 FEET HIGH, AND AT INTERVALS OF 100 FEET OR LESS ON TOWERS THAT ARE HIGHER THAN 200 FEET.
13. APPROVED GROUNDING KITS, WHICH INCLUDE GROUNDING STRAPS, SHALL BE USED TO GROUND THE COAXIAL CABLE SHIELDS, AND CONDUITS. THE GROUND CONDUCTORS FOR THE KITS AT THE TOP OF THE TOWER, AND IN THE MIDDLE SECTION OF THE TOWER, ARE BONDED DIRECTLY TO GROUND BAR USING EXOTHERMIC OR COMPRESSION CONNECTIONS.
14. ALL RADIO SIGNAL CABLE SHALL BE LABELED PER MARKET REQUIREMENTS.
15. ANTENNA FEED LINE SYSTEM SWEEP TESTING SHALL BE PERFORMED AND REPORTED IN ACCORDANCE WITH CARRIER REQUIREMENTS. CONTRACTOR WILL NOT ACCEPT A RADIO SIGNAL CABLE INSTALLATION WITH UNSATISFACTORY SWEEP TEST RESULTS. THERE SHALL ALSO BE A HARD COPY OF SWEEPS LEFT AT SITE UPON COMPLETION OF SWEEP TEST.

PRELIMINARY NOT FOR CONSTRUCTION

IT IS A VIOLATION OF LAW FOR ANY PERSON UNLESS THEY ARE ACTING UNDER THE DIRECTION OF A LICENSED PROFESSIONAL ENGINEER TO ALTER THIS DOCUMENT. UNLESS EXPLICITLY AGREED TO BY THE ENGINEER IN WRITING, THE ENGINEER DISCLAIMS ALL LIABILITY ASSOCIATED WITH THE REUSE, ALTERATION OR MODIFICATION OF THE CONTENTS HEREIN.

velocitel®
complete wireless solutions
1701 AMERICAN BLVD EAST
SUITE #16
BLOOMINGTON, MN 55425
952-944-1858 (MAIN)
952-944-1506 (FAX)

at&t MOBILITY
901 MARQUETTE AVE.
3RD FLOOR
MINNEAPOLIS, MN 55402

MNL01417
SHOREVIEW
FA# 10116081
3900 BETHEL DRIVE
ARDEN HILLS, MN 55112

NO	DATE	REVISIONS	BY	CHK	APP'D
B	11/05/15	REVISED PER COMMENTS	YS	MZ	–
A	10/05/15	ISSUED FOR REVIEW	YS	MZ	–

SCALE: DESIGNED: CHECKED:

GROUNDING & RF NOTES

FA #	DRAWING NUMBER	REV
10116081	E1	B

NOTE: ALL GROUNDING AND POWER MECHANCICAL CONNECTIONS ARE REQUIRED TO HAVE AN ANTI–OXIDATION COMPOUND

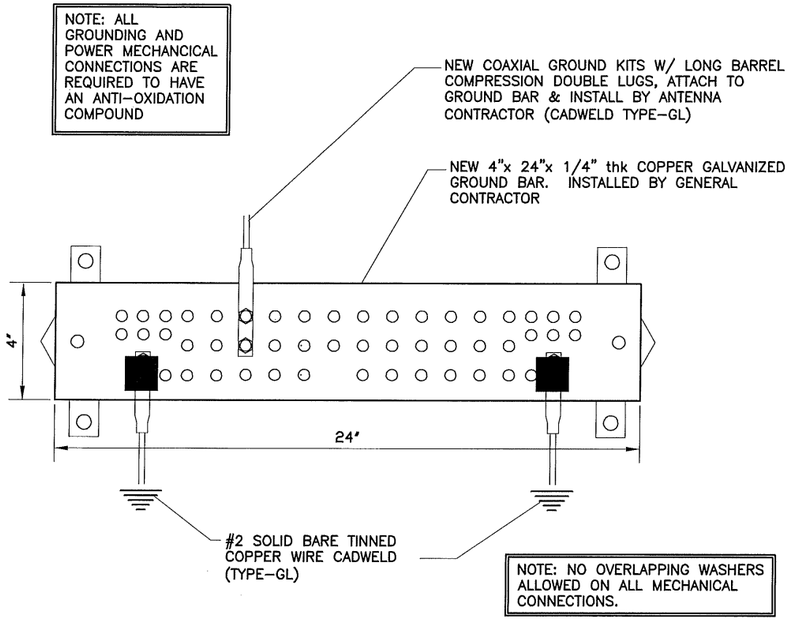

NOTE: NO OVERLAPPING WASHERS ALLOWED ON ALL MECHANICAL CONNECTIONS.

24"x36" SCALE: NTS
11"x17" SCALE: NTS

EQUIPMENT GROUND CONNECTION | 1

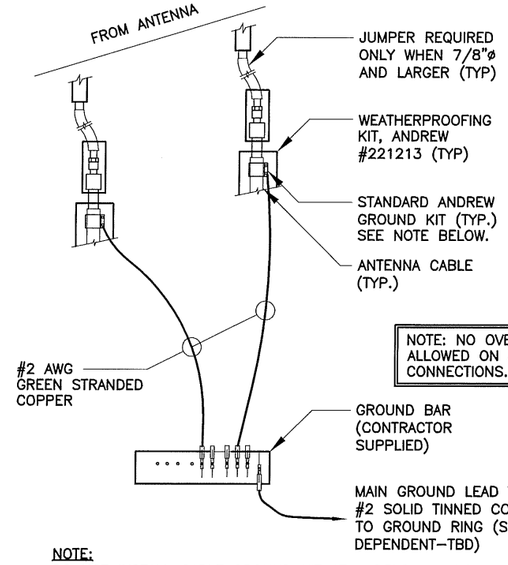

NOTE: NO OVERLAPPING WASHERS ALLOWED ON ALL MECHANICAL CONNECTIONS.

NOTE:
DO NOT INSTALL CABLE GROUND KIT AT A BEND ALWAYS DIRECT GROUND WIRE DOWN TO COAX ISOLATED GROUND BAR EXTERNAL (CIGBE).

24"x36" SCALE: NTS
11"x17" SCALE: NTS

CONNECTION OF GROUND WIRES TO GROUNDING BARS (TOWER/MONOPOLE/ROOFTOP) | 2

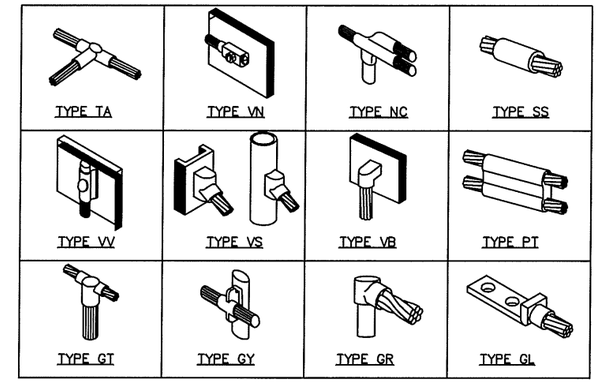

NOTE: CADWELD "TYPES" SHOWN ABOVE ARE EXAMPLES – CONSULT WITH PROJECT MANAGER FOR SPECIFIC TYPES OF CADWELDS TO BE USED FOR THIS PROJECT.

24"x36" SCALE: NTS
11"x17" SCALE: NTS

CADWELD DETAILS | 3

NOTE: ALL GROUNDING AND POWER MECHANCICAL CONNECTIONS ARE REQUIRED TO HAVE AN ANTI–OXIDATION COMPOUND

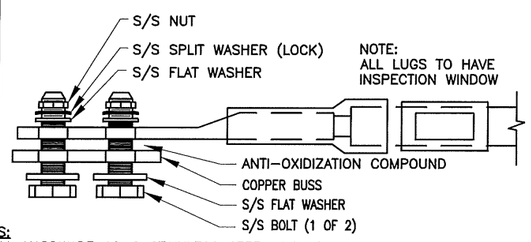

NOTES:
1. ALL HARDWARE 18–8 STAINLESS STEEL INCLUDING BELLEVILLES. COAT ALL SURFACES WITH ANIT–OXIDIZATION COMPOUND BEFORE MATING. (ALL BOLTS ARE TO BE INSTALLED UP AND OUT)
2. YOU MAY UTILIZE THE SAME HARDWARE TO CONNECT TWO LUGS TO THE SAME POSITION BUT THEY MUST SANDWICH THE GROUND BAR BETWEEN THEM AND NOT STACK THEM ON TOP OF EACH OTHER ON THE SAME SIDE OF BUS BAR
3. FLAT WASHERS MUST BE THE CORRECT DIAMETER TO PREVENT OVERLAP (TYPICALLY SAME OD AS THE SPLIT WASHER)
4. CONNECTIONS MUST BE TIGHT. ENSURE THE SPLIT WASHER IS FULLY COMPRESSED.

NOTE:
INDOOR LUGS REQUIRE INSPECTION WINDOWS. OUTDOOR LUGS DO NOT REQUIRE INSPECTION WINDOWS.

24"x36" SCALE: NTS
11"x17" SCALE: NTS

GROUND LUG DETAIL | 4

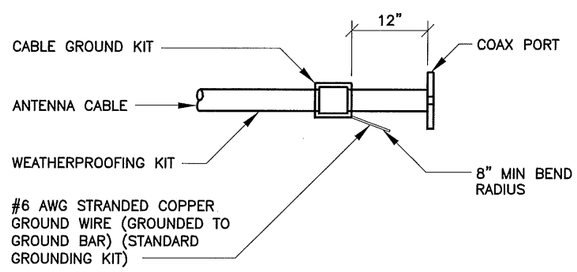

NOTE:
DO NOT INSTALL CABLE GROUND KIT AT A BEND AND ALWAYS DIRECT GROUND WIRE DOWN TO GROUND BAR.

24"x36" SCALE: NTS
11"x17" SCALE: NTS

CABLE GROUND KIT CONNECTION TO ANTENNA CABLE | 5

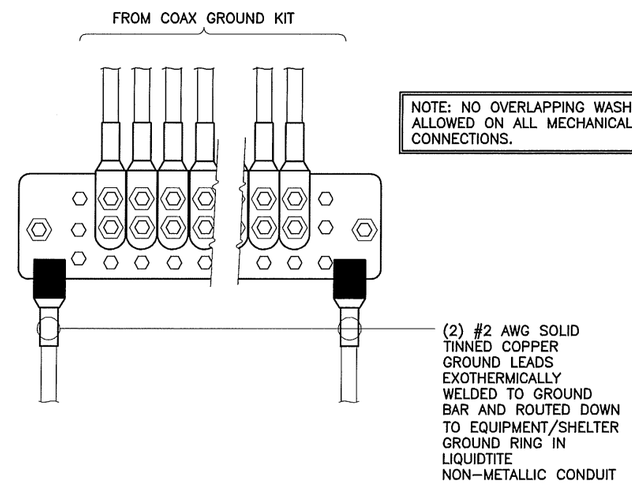

NOTE: NO OVERLAPPING WASHERS ALLOWED ON ALL MECHANICAL CONNECTIONS.

NOTES:
1. 1. MAIN GROUND BUSS BAR IS LOCATED BELOW COAX ENTRY PORT OR BELOW COAX AT END OF ICE BRIDGE FOR OUTDOOR EQUIPMENT.

24"x36" SCALE: NTS
11"x17" SCALE: NTS

MAIN GROUND BUSS BAR DETAIL | 6

PRELIMINARY NOT FOR CONSTRUCTION

IT IS A VIOLATION OF LAW FOR ANY PERSON UNLESS THEY ARE ACTING UNDER THE DIRECTION OF A LICENSED PROFESSIONAL ENGINEER TO ALTER THIS DOCUMENT. UNLESS EXPLICITLY AGREED TO BY THE ENGINEER IN WRITING, THE ENGINEER DISCLAIMS ALL LIABILITY ASSOCIATED WITH THE REUSE, ALTERATION OR MODIFICATION OF THE CONTENTS HEREIN.

velocitel®
complete wireless solutions
1701 AMERICAN BLVD EAST
SUITE #16
BLOOMINGTON, MN 55425
952-944-1858 (MAIN)
952-944-1506 (FAX)

at&t MOBILITY
901 MARQUETTE AVE.
3RD FLOOR
MINNEAPOLIS, MN 55402

MNL01417
SHOREVIEW
FA# 10116081
3900 BETHEL DRIVE
ARDEN HILLS, MN 55112

NO	DATE	REVISIONS	BY	CHK	APP'D
B	11/05/15	REVISED PER COMMENTS	YS	MZ	–
A	10/05/15	ISSUED FOR REVIEW	YS	MZ	–

SCALE: DESIGNED: CHECKED:

GROUNDING DETAILS

FA #	DRAWING NUMBER	REV
10116081	E2	B

NOTES:

P–SECTION:
THE PRODUCERS, OR "P" SECTION IS FOR CONNECTING SURGE PRODUCERS. ALL DC POWER EQUIPMENT, SURGE ARRESTORS, AND NON–COMMUNICATIONS CABINETS AND FRAMES ARE GROUNDED TO THE "P" SECTION. AN EXCEPTION IS BATTERY STANDS, LIKE THOSE USED FOR THE LARGE TWO–VOLT BATTERY ARRAYS, SUCH AS ABSOLUTE BATTERIES. THE DC POWER PLANT RETURN BUSS MASTER GROUND AND THE CABLE ENTRY PORT (HATCH PLATE) INSIDE GROUND ARE ALSO CONNECTED TO THIS SECTION.

A–SECTION:
THE ABSORBERS, OR "A" SECTION ACTS LIKE A SUMP TO CARRY OFF THE SURGE CURRENT FROM THE "P" SECTION AND TO ISOLATE THESE SURGES FROM THE "I" SECTION, WHERE THE ISOLATED COMMUNICATIONS EQUIPMENT IS CONNECTED. THE HALO INTERCONNECTION AND THE TWO HOME RUNS TO THE BGR ARE CONNECTED TO THIS SECTION.

I–SECTION:
"I" STANDS FOR ISOLATED EQUIPMENT. THIS IS FOR GROUNDING THE ISOLATED BONDING NETWORK WHERE ALL COMMUNICATIONS PATH EQUIPMENTIS CONNECTED.

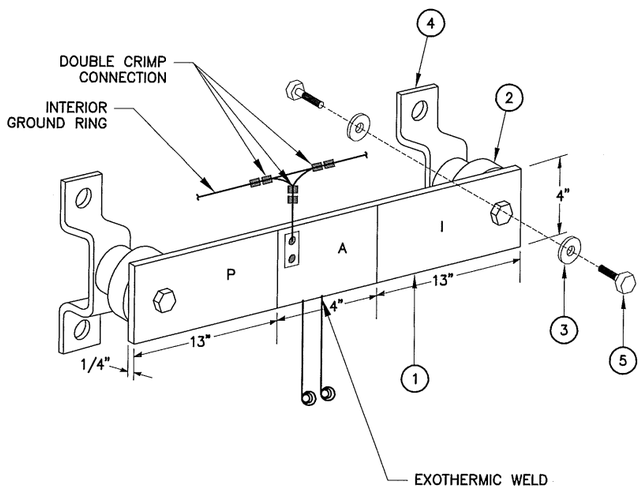

LEGEND

1 – COPPER GROUND BAR, 1/4"x 13"x 4"x 13"
2 – INSULATORS (NO INSULATORS ON TOWER)
3 – 5/8" LOCK WASHERS
4 – MOUNTING BRACKET (MOUNT HORIZONTAL ON VERTICAL CABLE LADDER)
5 – 5/8–11 X 1" H.H.C.S.BOLTS

24"x36" SCALE: NTS
11"x17" SCALE: NTS

GROUND BAR DETAIL 1

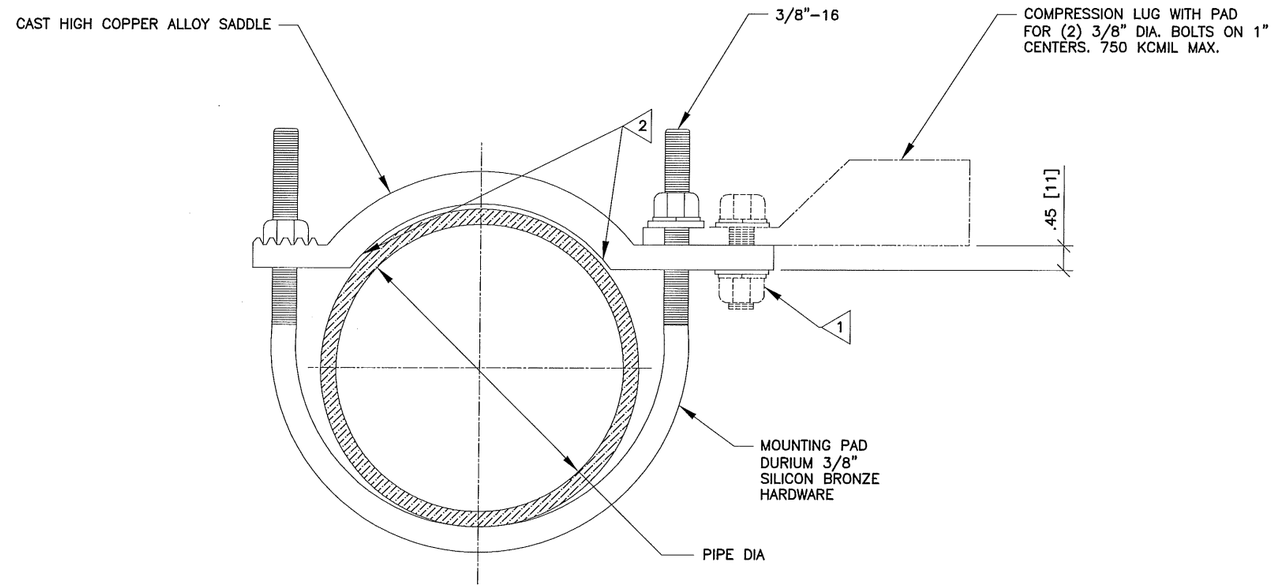

1 DURIUM (SILICON BRONZE) HARDWARE KIT (CAT # TMH 289). (ORDER SEPARATELY) INCL: (1) 38x125 HEB, (1) 38C HEN, (1) 38 SW, (1) 38 FW

2 PREPARE PIPE SURFACE TO VIRGIN METAL SHINE UNDER BRASS SADDLE CONTACT AREA. APPLY CLAMP SADDLE TO SHINING METAL SURFACE TIGHTENING TORQUE 240 IN*LBS.. [27.1Nm] SEAL SADDLE PERIMETER BY APPLYING OXIDE INHIBITING COMPOUND, BURNDY PEN–E OR EQUIVALENT.

24"x36" SCALE: NTS
11"x17" SCALE: NTS

BURNDY TYPE CAR-TC CLAMP DETAIL 2

PRELIMINARY NOT FOR CONSTRUCTION

IT IS A VIOLATION OF LAW FOR ANY PERSON UNLESS THEY ARE ACTING UNDER THE DIRECTION OF A LICENSED PROFESSIONAL ENGINEER TO ALTER THIS DOCUMENT. UNLESS EXPLICITLY AGREED TO BY THE ENGINEER IN WRITING, THE ENGINEER DISCLAIMS ALL LIABILITY ASSOCIATED WITH THE REUSE, ALTERATION OR MODIFICATION OF THE CONTENTS HEREIN.

velocitel®
complete wireless solutions
1701 AMERICAN BLVD EAST
SUITE #16
BLOOMINGTON, MN 55425
952-944-1858 (MAIN)
952-944-1506 (FAX)

at&t MOBILITY
901 MARQUETTE AVE.
3RD FLOOR
MINNEAPOLIS, MN 55402

MNL01417
SHOREVIEW
FA# 10116081
3900 BETHEL DRIVE
ARDEN HILLS, MN 55112

NO	DATE	REVISIONS	BY	CHK	APP'D
B	11/05/15	REVISED PER COMMENTS	YS	MZ	–
A	10/05/15	ISSUED FOR REVIEW	YS	MZ	–

SCALE: DESIGNED: CHECKED:

GROUNDING DETAILS

FA #	DRAWING NUMBER	REV
10116081	E2.1	B

ELECTRICAL SPECIFICATION:

1 ALL ELECTRICAL WORK SHALL BE COMPLETED IN ACCORDANCE WITH THE LATEST EDITION OF THE NATIONAL ELECTRICAL CODE.

2. COMPLY WITH THE LATEST EDITION OF THE UNIFORM BUILDING CODE, THE REQUIREMENTS OF ALL APPLICABLE MUNICIPAL AND STATE CODES AND REGULATIONS, AND UTILITY GUIDELINES.

3. PERFORM ALL VERIFICATION, OBSERVATIONS, TESTING AND EXAMINATION OF WORK PRIOR TO THE ORDERING OF ELECTRICAL EQUIPMENT AND THE ACTUAL CONSTRUCTION. ISSUE A WRITTEN NOTICE OF ALL FINDINGS TO THE CONSTRUCTION MANAGER LISTING ALL MALFUNCTIONS, FAULTY EQUIPMENT AND DISCREPANCIES.

4. UNDERGROUND CONDUIT SHALL BE RIGID POLYVINYL CHLORIDE CONDUIT: SCHEDULE 40, TYPE " CONFORMING TO UL ARTICLE 651: WESTERN PLASTICS OR CARBON MANUFACTURER. COUPLINGS SHALL BE SLIP–ON SOLVENT SEALED T PIPE: SOLVENT, WESTERN TYPE COMPATIBLE WITH PVC DUCT, ALL BENDS SHALL BE 30" MINIMUM RADIUS.

5. ALL WIRING SHALL BE STRANDED COPPER WITH MINIMUM 600V INSULATION (UNLESS OTHERWISE NOTED).

6. NEUTRAL SHALL BE COLOR CODED, INSULATION SHALL BE CROSS–LINKED POLYETHYLENE.

7. CONTRACTOR TO CONTACT ALL UTILITIES FOR LOCATION OF UNDERGROUND SERVICES. SERVICE LOCATIONS TO BE CONFIRMED PRIOR TO CONSTRUCTION.

8. THE CONTRACTOR IS RESPONSIBLE FOR ALL PERMITTING, FILING, AND FEES IN CONJUNCTION WITH THE PROJECT.

9. THE CONTRACTOR SHALL SCHEDULE ALL NECESSARY INSPECTIONS WITH THE PROPER AUTHORITIES AND INFORM CINGULAR 24–HOURS IN ADVANCE. ALL TICKETS AND INSPECTION VERIFICATIONS WILL BE SUBMITTED TO THE OWNER'S REPRESENTATIVE WITHIN 24–HOURS AFTER THE INSPECTION HAS TAKEN PLACE.

10. ALL EQUIPMENT, WIRING, AND MATERIALS MUST HAVE A UL LABEL

11. ALL WORK SHALL BE DONE BY QUALIFIED AND EXPERIENCED JOURNEYMEN AND PERFORMED IN A WORKMANLIKE MANNER AND SHALL PROCEED IN AN ORDERLY MANNER SO AS NOT TO HOLD UP THE PROGRESS OF THE PROJECT.

12. THOROUGHLY TEST ALL LINES FEEDERS, EQUIPMENT, AND DEVICES WITH MAXIMUM LOADS TO ASSURE PROPER OPERATION

13. CONDUCTOR LENGTHS SHALL BE CONTINUOUS FROM TERMINATION TO TERMINATION WITHOUT SPLICES

14. PROVIDE PULL BOXES WHERE SHOWN AND/OR WHERE REQUIRED BY CODES AND/OR UTILITY COMPANIES.

15. ALL CONDUIT ROUGH IN SHALL BE COORDINATED WITH THE MECHANICAL EQUIPMENT TO AVOID LOCATION CONFLICTS CONTRACTOR SHALL VERIFY ALL LOCATIONS

16. ALL WIRES SHALL BE TAGGED AT ALL PULL BOXES, J–BOXES, EQUIPMENT BOXES, AND CABINETS WITH APPROVED PLASTIC TAGS.

17. ALL BREAKERS IN PANEL BOXES SHALL BE IDENTIFIED WITH TYPE WRITTEN LABELS NEATLY PLACED ALONG SIDE OF THE BREAKER.

18. ALL FIRE RATED WALL AND FLOOR PENETRATIONS ARE TO BE CAULKED AND SEALED WITH A FIRE RESISTANT CAULKING TO MAINTAIN THE INTEGRITY OF THE FIRE SEPARATION.

19. UTILIZE SONNEBORN TYPE NP–1 CAULKING FOR SEALING ALL EXTERIOR WALL PENETRATIONS

ELECTRICAL SPECIFICATIONS | 3

NOT USED | 4

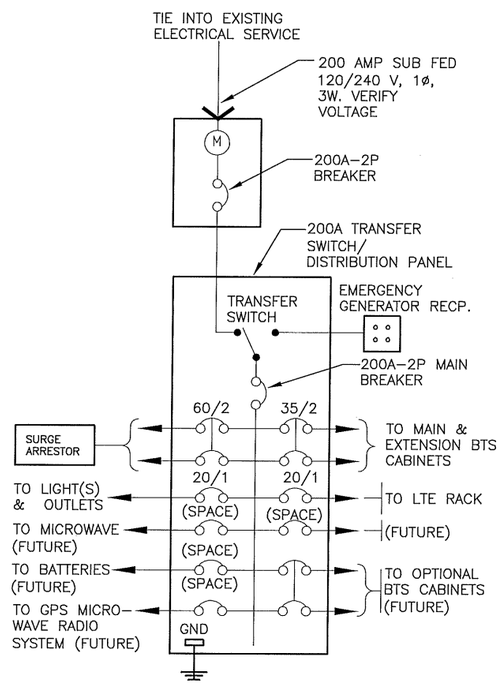

ONE LINE DIAGRAM | 2

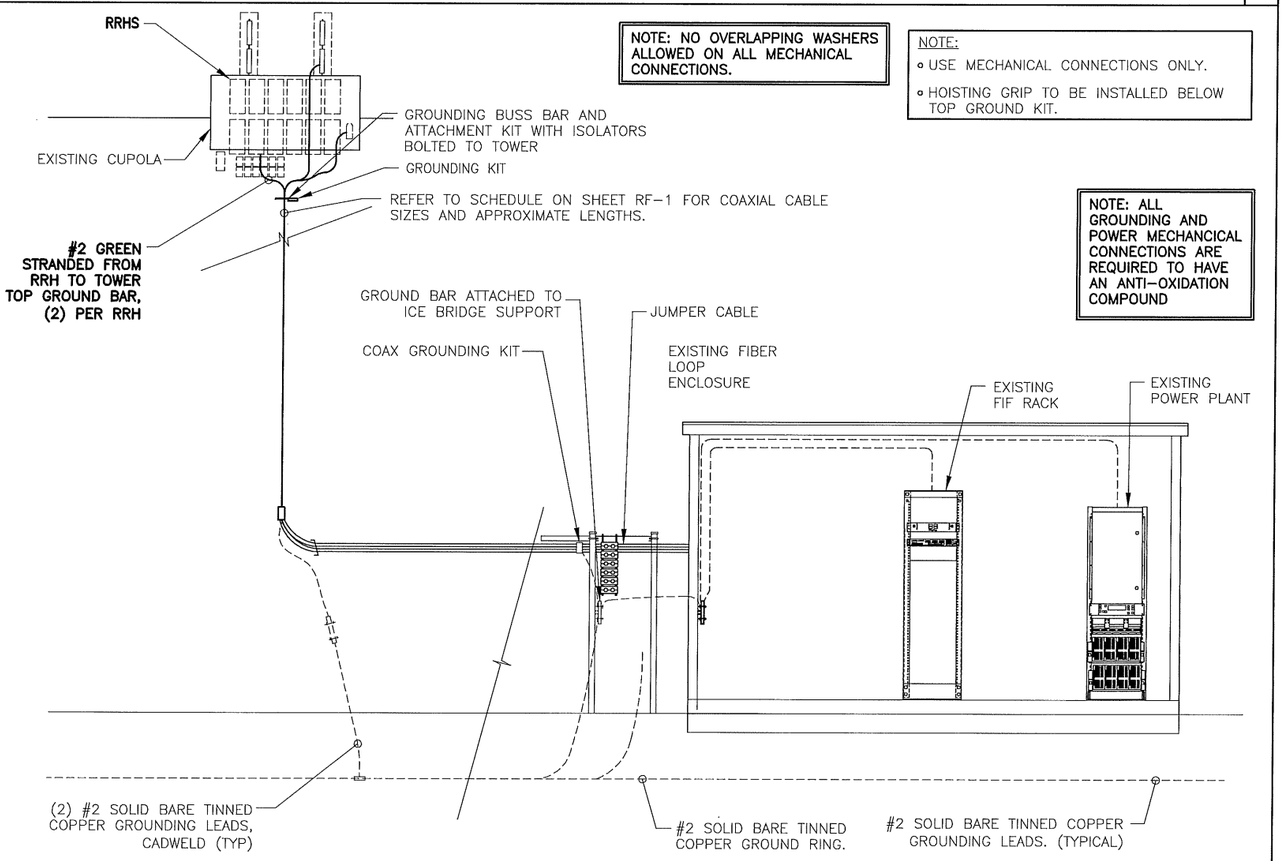

TOWER GROUNDING SCHEMATIC DIAGRAM | 1

PRELIMINARY NOT FOR CONSTRUCTION

IT IS A VIOLATION OF LAW FOR ANY PERSON UNLESS THEY ARE ACTING UNDER THE DIRECTION OF A LICENSED PROFESSIONAL ENGINEER TO ALTER THIS DOCUMENT, UNLESS EXPLICITLY AGREED TO BY THE ENGINEER IN WRITING. THE ENGINEER DISCLAIMS ALL LIABILITY ASSOCIATED WITH THE REUSE, ALTERATION OR MODIFICATION OF THE CONTENTS HEREIN.

velocitel® complete wireless solutions
1701 AMERICAN BLVD EAST
SUITE #16
BLOOMINGTON, MN 55425
952-944-1858 (MAIN)
952-944-1506 (FAX)

at&t MOBILITY
901 MARQUETTE AVE.
3RD FLOOR
MINNEAPOLIS, MN 55402

MNL01417
SHOREVIEW
FA# 10116081
3900 BETHEL DRIVE
ARDEN HILLS, MN 55112

NO	DATE	REVISIONS	BY	CHK	APP'D
B	11/05/15	REVISED PER COMMENTS	YS	MZ	–
A	10/05/15	ISSUED FOR REVIEW	YS	MZ	–

SCALE: DESIGNED: CHECKED:

GROUNDING AND ELECTRICAL DETAILS

FA #	DRAWING NUMBER	REV
10116081	E3	B

PROJECT DESCRIPTION:

MAINTENANCE DRAWINGS FOR A ROOFTOP CUPOLA

SITE NAME:

SHOREVIEW

SITE NUMBER:

100807-A

SITE ADDRESS:

3900 BETHEL DRIVE
SAINT PAUL, MN 55112

COORDINATES:

LAT: 45.0587°
LONG: -93.1623°

PROJECT CONTACTS	
PROJECT CONTRACTOR NAME	MARK HENNEK
PROJECT CONTRACTOR EMAIL ADDRESS	MARK.HENNEK@FDHVELOCITEL.COM
PROJECT CONTRACTOR ENGINEER PHONE NUMBER	(612) 701-8815
FDH VELOCITEL PROJECT ENGINEER NAME	**MICHAEL BRENNAN, EI**
FDH VELOCITEL PROJECT ENGINEER EMAIL ADDRESS	**MICHAEL.BRENNAN@FDHVELOCITEL.COM**
FDH VELOCITEL PROJECT ENGINEER PHONE NUMBER	**(314) 773-4000**

STRUCTURAL ASSESSMENT	
COMPANY	FDH VELOCITEL
PROJECT NO.	15CCSP2400
DATE	NOVEMBER 04, 2015

THIS REPORT WAS BASED ON A SPECIFIC ANTENNA AND COAX CONFIGURATION PROVIDED BY THE TOWER OWNER. ANY CHANGE TO THIS INFORMATION MUST BE REVIEWED BY FDH VELOCITEL.

ALL CONSTRUCTION SHALL COMPLY WITH THE TIA-1019-A STANDARD

SHEET INDEX

SHEET	DESCRIPTION	REV.
T-1	TITLE SHEET	0
N-1	MODIFICATION INSPECTION CHECKLIST	0
N-2	GENERAL NOTES	0
S-1	MODIFICATION SCHEDULE & MOUNT PIPE EXTENSION INSTALLATION DETAILS	0

PREPARED BY:

FDH VELOCITEL
ENGINEERING INNOVATION
VELOCITEL, INC., d.b.a. FDH VELOCITEL
6521 MERIDIEN DRIVE RALEIGH, NC 27616
PHONE: 919-755-1012 FAX: 919-755-1031

PREPARED FOR:

velocitel
complete wireless solutions
4164 INNSLAKE DRIVE, SUITE B
GLEN ALLEN, VA 23060
(804) 217-7088

PROFESSIONAL ENGINEER
I hereby certify that this plan, specification, or report was prepared by me or under my direct supervision and that I am a duly Licensed Professional Engineer under the laws of the State of Minnesota.
Print Name: Dennis D. Abel
Signature:
Date 11-13-2015 License # 41120

11/13/15
DENNIS D. ABEL, PE
MINNESOTA LIC. NO. 41120

DRAWN BY:	WJD
CHECKED BY:	MTB
ENG APPV'D:	DDA

SUBMITTALS		
DATE	DESCRIPTION	REV
11/13/15	CONSTRUCTION	0

THE INFORMATION CONTAINED IN THIS SET OF DOCUMENTS IS PROPRIETARY BY NATURE. REPRODUCTION OR CAUSING TO BE REPRODUCED THE WHOLE OR ANY PART OF THESE DRAWINGS WITHOUT THE PERMISSION OF FDH VELOCITEL IS PROHIBITED.

FDH PROJECT NUMBER:

15CCQF2400

SITE NAME:

SHOREVIEW

SITE NUMBER:

100807-A

SITE ADDRESS:

3900 BETHEL DRIVE
SAINT PAUL, MN 55112

SHEET TITLE

TITLE SHEET

SHEET NUMBER

T-1

MODIFICATION INSPECTION NOTES:

MI CHECKLIST

INSPECTIONS AND TESTING REQUIRED	REPORT ITEM
PRE-CONSTRUCTION	
X	MI CHECKLIST DRAWING
N/A	EOR APPROVED SHOP DRAWINGS
X	FABRICATION INSPECTION
N/A	FABRICATOR CERTIFIED WELD INSPECTION
X	MATERIAL TEST REPORT (MTR)
N/A	FABRICATOR NDE INSPECTION
N/A	NDE REPORT OF MONOPOLE BASE PLATE
X	PACKING SLIPS
ADDITIONAL TESTING AND INSPECTIONS:	
CONSTRUCTION	
X	CONSTRUCTION INSPECTIONS
N/A	FOUNDATION INSPECTIONS
N/A	CONCRETE COMPRESSIVE STRENGTH AND SLUMP TESTS
N/A	POST INSTALLED ANCHOR ROD VERIFICATION
N/A	BASE PLATE GROUT VERIFICATION
X	CONTRACTOR'S CERTIFIED WELD INSPECTION
N/A	EARTHWORK: LIFT AND DENSITY
X	ON SITE COLD GALVANIZATIONS
N/A	GUY WIRE TENSION REPORT
X	GC AS BUILT DOCUMENTS
ADDITIONAL TESTING AND INSPECTIONS:	
POST-CONSTRUCTION	
X	MI INSPECTOR REDLINE OR RECORD DRAWING(S)
N/A	POST INSTALLED ANCHOR ROD PULL-OUT TESTING
X	PHOTOGRAPHS
ADDITIONAL TESTING AND INSPECTIONS:	

NOTE: X DENOTES A DOCUMENT NEEDED FOR THE PMI REPORT
N/A DENOTES A DOCUMENT THAT IS NOT REQUIRED FOR THE PMI REPORT

GENERAL:

1. THE POST CONSTRUCTION INSPECTION (MI) IS A VISUAL INSPECTION OF TOWER MODIFICATIONS AND A REVIEW OF CONSTRUCTION INSPECTIONS AND OTHER REPORTS TO ENSURE THE INSTALLATION WAS CONSTRUCTED IN ACCORDANCE WITH THE CONTRACT DOCUMENTS, NAMELY THE MODIFICATION DRAWINGS, AS DESIGNED BY THE ENGINEER OF RECORD (EOR).
2. THE MI IS TO CONFIRM INSTALLATION CONFIGURATION AND WORKMANSHIP ONLY AND IS NOT A REVIEW OF THE MODIFICATION DESIGN ITSELF, NOR DOES THE MI INSPECTOR TAKE OWNERSHIP OF THE MODIFICATION DESIGN. OWNERSHIP OF THE STRUCTURAL MODIFICATION DESIGN EFFECTIVENESS AND INTEGRITY RESIDES WITH THE EOR AT ALL TIMES.
3. ALL MI'S SHALL BE CONDUCTED BY A MI INSPECTOR THAT IS APPROVED TO PERFORM ELEVATED WORK FOR FDH VELOCITEL.
4. TO ENSURE THAT THE REQUIREMENTS OF THE MI ARE MET, IT IS VITAL THAT THE GENERAL CONTRACTOR (GC) AND THE MI INSPECTOR BEGIN COMMUNICATING AND COORDINATING AS SOON AS A PO IS RECEIVED. IT IS EXPECTED THAT EACH PARTY WILL BE PROACTIVE IN REACHING OUT TO THE OTHER PARTY. IF CONTACT INFORMATION IS NOT KNOWN, CONTACT YOUR FDH VELOCITEL POINT OF CONTACT (POC).
5. REFER TO CCR-01 : CONTRACTOR CLOSEOUT REQUIREMENTS FOR FURTHER DETAILS AND REQUIREMENTS.

MI INSPECTOR:

1. THE MI INSPECTOR IS REQUIRED TO CONTACT THE GC AS SOON AS RECEIVING A PO FOR THE MI TO, AT A MINIMUM:
   - REVIEW THE REQUIREMENTS OF THE MI CHECKLIST
   - WORK WITH THE GC TO DEVELOP A SCHEDULE TO CONDUCT ON-SITE INSPECTIONS, INCLUDING FOUNDATION INSPECTIONS
2. THE PCI INSPECTOR IS RESPONSIBLE FOR COLLECTING ALL GENERAL CONTRACTOR (GC) INSPECTION AND TEST REPORTS, REVIEWING THE DOCUMENTS FOR ADHERENCE TO THE CONTRACT DOCUMENTS, CONDUCTING THE IN-FIELD INSPECTIONS, AND SUBMITTING THE MI REPORT TO FDH VELOCITEL.

CORRECTION OF FAILING MI's:

1. IF THE MODIFICATION INSTALLATION WOULD FAIL THE MI ("FAILED MI"), THE GC SHALL WORK WITH FDH VELOCITEL TO COORDINATE A REMEDIATION PLAN IN ONE OF TWO WAYS:
   - CORRECT FAILING ISSUES TO COMPLY WITH THE SPECIFICATIONS CONTAINED IN THE ORIGINAL CONTRACT DOCUMENTS AND COORDINATE A SUPPLEMENT MI.
   - OR, WITH FDH VELOCITEL'S APPROVAL, THE GC MAY WORK WITH THE EOR TO RE-ANALYZE THE MODIFICATION/REINFORCEMENT USING THE AS-BUILT CONDITION.

REQUIRED PHOTOS:

1. BETWEEN THE GC AND THE MI INSPECTOR THE FOLLOWING PHOTOGRAPHS, AT A MINIMUM, ARE TO BE TAKEN AND INCLUDED IN THE MI REPORT:
   - PRE-CONSTRUCTION GENERAL SITE CONDITION
   - PHOTOGRAPHS DURING THE REINFORCEMENT MODIFICATION CONSTRUCTION/ERECTION AND INSPECTION
     - RAW MATERIALS
     - PHOTOS OF ALL CRITICAL DETAILS
     - FOUNDATION MODIFICATIONS
     - WELD PREPARATION
     - BOLT INSTALLATION AND TORQUE
     - FINAL INSTALLED CONDITION
     - SURFACE COATING REPAIR
   - POST CONSTRUCTION PHOTOGRAPHS
     - FINAL INFIELD CONDITION
2. PHOTOS OF ELEVATED MODIFICATIONS TAKEN FROM THE GROUND SHALL BE CONSIDERED INADEQUATE.

PREPARED BY:

FDH VELOCITEL
ENGINEERING INNOVATION
VELOCITEL, INC., d.b.a. FDH VELOCITEL
6521 MERIDIEN DRIVE RALEIGH, NC 27616
PHONE: 919-755-1012 FAX: 919-755-1031

PREPARED FOR:

velocitel
complete wireless solutions
4164 INNSLAKE DRIVE, SUITE B
GLEN ALLEN, VA 23060
(804) 217-7088

PROFESSIONAL ENGINEER
I hereby certify that this plan, specification, or report was prepared by me or under my direct supervision and that I am a duly Licensed Professional Engineer under the laws of the State of Minnesota.
Print Name: Dennis D. Abel
Signature:
Date 11-13-2015 License # 41120

11/13/15
DENNIS D. ABEL, PE
MINNESOTA LIC. NO. 41120

DRAWN BY:	WJD
CHECKED BY:	MTB
ENG APPV'D:	DDA

SUBMITTALS		
DATE	DESCRIPTION	REV
11/13/15	CONSTRUCTION	0

THE INFORMATION CONTAINED IN THIS SET OF DOCUMENTS IS PROPRIETARY BY NATURE. REPRODUCTION OR CAUSING TO BE REPRODUCED THE WHOLE OR ANY PART OF THESE DRAWINGS WITHOUT THE PERMISSION OF FDH VELOCITEL IS PROHIBITED.

FDH PROJECT NUMBER:
15CCQF2400

SITE NAME:
SHOREVIEW

SITE NUMBER:
100807-A

SITE ADDRESS:
3900 BETHEL DRIVE
SAINT PAUL, MN 55112

SHEET TITLE
MODIFICATION INSPECTION CHECKLIST

SHEET NUMBER
N-1

GENERAL NOTES:

1. ALL WORK SHALL BE DONE IN ACCORDANCE WITH ALL APPLICABLE FEDERAL, STATE AND LOCAL CODES AND ORDINANCES. IT IS THE CONTRACTOR'S RESPONSIBILITY TO OBTAIN ALL PERMITS NECESSARY TO COMPLETE THE PROJECT AND ABIDE BY ALL CONDITIONS AND REQUIREMENTS OF THE PERMITS.
2. THE CONTRACTOR SHALL BE RESPONSIBLE FOR VERIFICATION OF ALL DIMENSIONS, ELEVATIONS AND EXISTING CONDITIONS AT THE SITE BEFORE ORDERING ANY MATERIALS OR DOING ANY WORK. NO EXTRA CHARGE OR COMPENSATION SHALL BE ALLOWED DUE TO DIFFERENCE BETWEEN ACTUAL DIMENSIONS AND DIMENSIONS INDICATED ON THE CONSTRUCTION DRAWINGS. ANY SUCH DISCREPANCY IN DIMENSION WHICH MAY BE FOUND SHALL BE SUBMITTED TO FDH VELOCITEL FOR CONSIDERATION BEFORE THE CONTRACTOR PROCEEDS WITH THE WORK IN THE AFFECTED AREAS.
3. INCORRECTLY FABRICATED, DAMAGED, OTHERWISE MISFITTING, OR NON-CONFORMING MATERIALS AND CONDITIONS SHALL BE REPORTED TO FDH VELOCITEL PRIOR TO ANY REMEDIAL OR CORRECTIVE ACTION. ALL ACTIONS SHALL REQUIRE FDH VELOCITEL APPROVAL.
4. IT IS THE CONTRACTOR'S SOLE RESPONSIBILITY TO DETERMINE ERECTION PROCEDURE AND SEQUENCE TO ENSURE THE SAFETY OF THE STRUCTURE AND ITS COMPONENT PARTS DURING ERECTION AND/OR FIELD MODIFICATIONS. THIS INCLUDES, BUT IS NOT LIMITED TO, THE ADDITION OF TEMPORARY BRACING, GUYS OR TIE DOWNS THAT MAY BE NECESSARY. SUCH MATERIAL SHALL BE REMOVED AFTER THE COMPLETION OF THE PROJECT.
5. CONTRACTOR SHALL PROMPTLY REMOVE ANY & ALL DEBRIS FROM SITE AND RESTORE AS BEST AS POSSIBLE TO PRECONSTRUCTION CONDITION.

CONTRACTOR QUALIFICATION NOTES:

1. ALL REPAIRS SHALL BE PERFORMED BY A TOWER CONTRACTOR WITH A MINIMUM 5 YEARS EXPERIENCE IN TOWER ERECTION AND RETROFIT AND WITH WORKING KNOWLEDGE OF THE ANSI/TIA-222-G "STRUCTURAL STANDARD FOR ANTENNA SUPPORTING STRUCTURES AND ANTENNAS".
2. CONTRACTOR IS RESPONSIBLE FOR ALL CONSTRUCTION MEANS AND METHODS. SHOULD THE CONTRACTOR REQUIRE DIRECT CONSULTATION, FDH VELOCITEL IS WILLING TO OFFER SERVICES BASED UPON AN AGREED FEE FOR THE WORK REQUIRED.
3. ALL SUBMITTAL INFORMATION MUST BE SENT TO FDH VELOCITEL 6521 MERIDIEN DRIVE, RALEIGH NC, 27616, TEL. (919) 755-1012, FAX. (919) 755-1031, E-MAIL INFO@FDHVELOCITEL.COM. ANY VARIATION OF THESE SPECIFICATIONS OR DRAWINGS WITHOUT CONSENT FROM FDH VELOCITEL WILL VOID ANY RESPONSIBILITY OR LIABILITY FOR DAMAGE (MATERIAL OR PHYSICAL) TOWARDS FDH VELOCITEL
4. ALL CONSTRUCTION TO BE IN ACCORDANCE WITH THE TIA-1019-A STANDARD.

JOB SITE SAFETY & NOTES:

1. NEITHER THE PROFESSIONAL ACTIVITIES OF FDH VELOCITEL NOR THE PRESENCE OF FDH VELOCITEL OR EMPLOYEES AND SUB-CONSULTANTS AT THE CONSTRUCTION SITE, SHALL RELIEVE THE GENERAL CONTRACTOR AND OR SUBCONTRACTORS AND ANY OTHER ENTITY OF THEIR OBLIGATIONS, DUTIES AND RESPONSIBILITIES INCLUDING, BUT NOT LIMITED TO, CONSTRUCTION MEANS, METHODS, SEQUENCE, TECHNIQUES OR PROCEDURES NECESSARY FOR PERFORMING, SUPERINTENDING OR COORDINATING ALL PORTIONS OF THE WORK OF CONSTRUCTION IN ACCORDANCE WITH THE CONTRACT DOCUMENTS AND ANY HEALTH OR SAFETY PRECAUTIONS REQUIRED BY ANY REGULATORY AGENCIES. THE GENERAL CONTRACTOR AND OR SUBCONTRACTOR IS SOLELY RESPONSIBLE FOR JOB SAFETY, AND WARRANTS THAT THIS INTENT IS EVIDENT BY ACCEPTING THIS WORK.

STEEL:

1. ALL STRUCTURAL STEEL SHALL BE FABRICATED AND ERECTED IN ACCORDANCE WITH THE LATEST AISC CODE AND ASTM SPECIFICATIONS.
2. ALL CONNECTIONS OF STRUCTURAL STEEL MEMBERS SHALL BE MADE USING SPECIFIED WELDS WITH WELDING ELECTRODES E-70XX OR SPECIFIED HIGH STRENGTH BOLTS TO BE ASTM A325N, THREAD INCLUDED WITH SHEAR PLANE (UNLESS OTHERWISE NOTED).
3. ALL BOLTED CONNECTIONS TO BE INSTALLED TO A SNUG-TIGHTENED CONDITION IN ACCORDANCE WITH AISC 13 PART 16.2, "SPECIFICATION FOR STRUCTURAL JOINTS USING ASTM A325 OR A490 BOLTS", SECTION 8.1, UNLESS OTHERWISE SPECIFIED. WHEN "X" TYPE BOLTS ARE USED, CONTRACTOR MAY BE REQUIRED TO STACK ADDITIONAL WASHERS TO OBTAIN PROPER SNUG TIGHT INSTALLATION. ALL NUTS SHALL BE HEAVY HEX UNLESS OTHERWISE NOTED.
4. ALL STEEL, AFTER FABRICATION, SHALL BE HOT DIPPED GALVANIZED PER ASTM A-123. ALL DAMAGED SURFACES, WELDED AREAS AND AUTHORIZED NON-GALVANIZED MEMBERS OR PARTS (EXISTING OR NEW) SHALL BE PAINTED WITH MULTIPLE COATS OF ZRC COLD GALVANIZING COMPOUND ACHEIVING A MINIMUM OF 4 MILS DRY FILM PER ASTM A 780.
5. ALL SHOP AND FIELD WELDING SHALL BE DONE BY WELDERS QUALIFIED AS DESCRIBED IN THE "AMERICAN WELDING SOCIETY'S STANDARD QUALIFICATION PROCEDURE" TO PERFORM THE TYPE OF WORK REQUIRED. CONTRACTOR IS REQUIRED TO PROVIDE FDH VELOCITEL WITH A PASSING CERTIFIED WELDING INSPECTION FOR ALL WELDS.
6. STRUCTURAL STEEL MAY NOT BE TORCH CUT FOR FABRICATION. ALL STEEL FABRICATION MUST FOLLOW AISC STANDARDS.

MISC. NOTES:

1. ALL MODIFICATIONS ARE ASSUMED TO BE MADE ON AN EMPTY TOWER. CONTRACTOR IS RESPONSIBLE TO MAKE PROVISIONS TO SUPPORT OR WORK AROUND EXISTING ANTENNAS AND TRANSMISSION LINES. MODIFICATIONS MUST BE CONTINUOUS THROUGH ALL AREAS SHOWN.
2. CONTRACTOR FIELD VERIFY ALL DIMENSIONS PRIOR TO CONSTRUCTION.

FABRICATION NOTES:

1. ALL DIMENSIONS ARE PRELIMINARY UNTIL FIELD VERIFIED BY CONTRACTOR. ANY CHANGES MUST BE APPROVED BY ENGINEER OF RECORD IN WRITING PRIOR TO FABRICATION AND INSTALLATION.
2. NEW STEEL MEMBERS MUST HAVE SINGLE DRILLED HOLES. SLOTTED AND DOUBLE DRILLED HOLES ARE NOT ACCEPTABLE MEANS OF FABRICATION.

SUBSTITUTES AND/OR EQUALS:

1. IF CONTRACTOR WISHES TO FURNISH OR USE A SUBSTITUTE ITEM OF MATERIAL OR EQUIPMENT, CONTRACTOR SHALL FIRST MAKE WRITTEN APPLICATION TO ENGINEER OF RECORD FOR ACCEPTANCE THEREOF, CERTIFYING THAT THE PROPOSED SUBSTITUTE WILL PERFORM ADEQUATELY THE FUNCTIONS AND ACHIEVE THE RESULTS CALLED FOR BY THE GENERAL DESIGN, BE SIMILAR IN SUBSTANCE TO THAT SPECIFIED AND SUITED TO THE SAME USE AS THAT SPECIFIED. ALL VARIATIONS OF THE PROPOSED SUBSTITUTE FROM THAT SPECIFIED WILL BE IDENTIFIED IN THE APPLICATION AND AVAILABLE MAINTENANCE, REPAIR AND REPLACEMENT SERVICE WILL BE INDICATED. THE APPLICATION WILL ALSO CONTAIN AN ITEMIZED ESTIMATE OF ALL COSTS OR CREDITS THAT WILL RESULT DIRECTLY OR INDIRECTLY FROM ACCEPTANCE OF SUCH SUBSTITUTE INCLUDING COSTS OF REDESIGN AND CLAIMS OF OTHER CONTRACTORS AFFECTED BY THE RESULTING CHANGE, ALL OF WHICH WILL BE CONSIDERED BY ENGINEER OF RECORD IN EVALUATION OF THE PROPOSED SUBSTITUTE. ENGINEER OF RECORD MAY REQUIRE CONTRACTOR TO FURNISH ADDITIONAL DATA ABOUT THE PROPOSED SUBSTITUTE.

COLD GALVANIZATION/SURFACE PREPARATION NOTES:

1. CONTRACTOR TO USE ZINGA OR ZRC COLD GALVANIZATION COMPOUNDS OR APPROVED EQUIVALENT.
2. PREPARE RUSTED/CORRODED SURFACE FOR TREATMENT ACCORDING TO MANUFACTURER'S RECOMMENDATIONS.
3. CONTRACTOR TO APPLY (2) COATS OF COLD GALVANIZATION COMPOUND PER MANUFACTURER'S RECOMMENDATION. DRYING AND CURING TIMES MUST BE UTILIZED PER MANUFACTURER'S RECOMMENDATION.
4. APPLY ALL COATINGS BY BRUSH IN CALM WIND CONDITIONS. THE USE OF AEROSOL IS NOT PERMITTED.
5. IF THE TOWER IS PAINTED, BRUSH PAINT ALL TREATED AREAS TO MATCH TOWER AFTER COLD GALVANIZATION COMPOUND IS ALLOWED TO CURE.

SURFACE PREPARATION:

1. PREPARE SURFACE TO BE WELDED BY REMOVING PAINT OR GALVANIZATION TO BARE METAL USING POWER WIRE BRUSHING IN ACCORDANCE WITH SSPC-SP11, (STEEL STRUCTURES PAINTING COUNCIL). FOLLOWING POWER WIRE BRUSHING CONTRACTOR SHALL POLISH METAL SURFACE WITH HIGH SPEED GRINDER WITH 400+ GRIT SANDPAPER.
2. AFTER NEW STEEL INSTALLATION CONTRACTOR TO BRUSH PAINT (2) COATS OF ZRC OR ZINGA COLD GALVANIZATION COMPOUND PER MANUFACTURER'S SPECIFICATIONS.

WELDING NOTES:

1. ALL WELDING TO THE EXISTING TOWER SHALL BE PERFORMED BY CERTIFIED WELDERS UTILIZING PROCEDURES QUALIFIED IN ACCORDANCE WITH AWS D1.1 AND AWS C5.4.
2. CONTRACTOR SHALL COMPLY WITH AWS D1.1 FOR PROCEDURES, APPEARANCE AND QUALITY OF WELDS AND FOR METHODS USED IN CORRECTING WELDING. ALL WELDERS AND WELDING PROCESSES SHALL BE QUALIFIED IN ACCORDANCE WITH AWS "STANDARD QUALIFICATION PROCEDURES". CONTRACTOR SHALL SUBMIT CERTIFICATION OF WELDERS TO THE ENGINEER PRIOR TO COMMENCEMENT OF THE WORK.
3. CONTRACTOR RESPONSIBLE FOR TEMPORARY HEAT SHIELDING AS REQUIRED DURING WELDING.
4. CONTRACTOR RESPONSIBLE FOR VIEWING EXISTING TOWER FOR LOOSE AND FLAMMABLE MATERIAL PRIOR TO WELDING FLAT PLATE.
5. ALL WELDS TO BE VISUALLY INSPECTED BY A CERTIFIED WELD INSPECTOR PER AWS D1.1.

STEEL GRADE SCHEDULE

SCOPE	SHAPE	GRADE	YIELD STRENGTH (F_y)	ULTIMATE STRENGTH (F_u)
ALL	PIPE	A53 GR. B	35 KSI	60 KSI

PREPARED BY:

FDH VELOCITEL
ENGINEERING INNOVATION
VELOCITEL, INC., d.b.a. FDH VELOCITEL
6521 MERIDIEN DRIVE RALEIGH, NC 27616
PHONE: 919-755-1012 FAX: 919-755-1031

PREPARED FOR:

velocitel
complete wireless solutions
4164 INNSLAKE DRIVE, SUITE B
GLEN ALLEN, VA 23060
(804) 217-7088

PROFESSIONAL ENGINEER
I hereby certify that this plan, specification, or report was prepared by me or under my direct supervision and that I am a duly Licensed Professional Engineer under the laws of the State of Minnesota.
Print Name: Dennis D. Abel
Signature:
Date 11-13-2015 License # 41120

11/13/15
DENNIS D. ABEL, PE
MINNESOTA LIC. NO. 41120

DRAWN BY:	WJD
CHECKED BY:	MTB
ENG APPV'D:	DDA

SUBMITTALS

DATE	DESCRIPTION	REV
11/13/15	CONSTRUCTION	0

THE INFORMATION CONTAINED IN THIS SET OF DOCUMENTS IS PROPRIETARY BY NATURE. REPRODUCTION OR CAUSING TO BE REPRODUCED THE WHOLE OR ANY PART OF THESE DRAWINGS WITHOUT THE PERMISSION OF FDH VELOCITEL IS PROHIBITED.

FDH PROJECT NUMBER:
15CCQF2400

SITE NAME:
SHOREVIEW

SITE NUMBER:
100807-A

SITE ADDRESS:
3900 BETHEL DRIVE
SAINT PAUL, MN 55112

SHEET TITLE
GENERAL NOTES

SHEET NUMBER
N-2

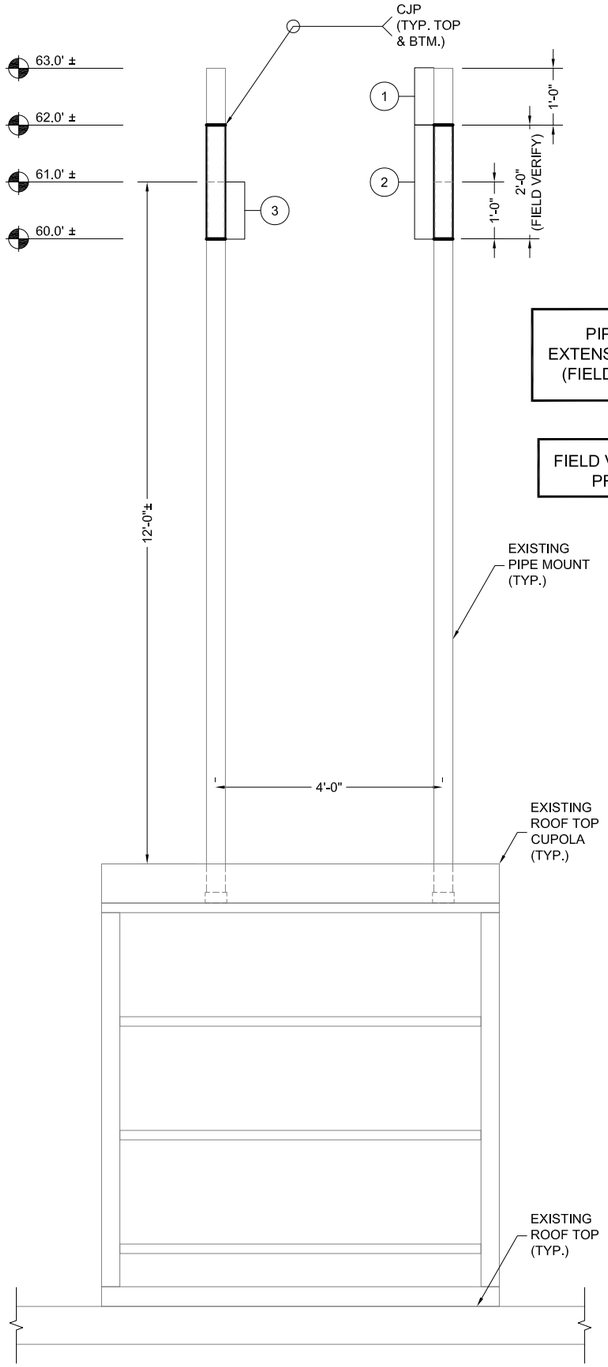

PIPE TO BE USED FOR MOUNT PIPE EXTENSION SHALL BE P3.5 (4" X0.226") X 2'-0" (FIELD VERIFY TO MATCH EXISTING PIPE)

FIELD VERIFY LENGTH OF NEW PIPE TO FIT PROPOSED STEALTH CANNISTER.

TOP 12" OF EXISTING MOUNT PIPE (WITH BULKHEAD) TO BE REMOVED AND REINSTALLED ON TOP OF EXTENSION.

MOUNT PIPE EXTENSION LAYOUT
ELEVATION VIEW

1 / S-1 ELEVATION
SCALE: NTS

TOWER MODIFICATION SCHEDULE

NO.	TYPE OF MODIFICATION	BTM. ELEV.	TOP ELEV.	SHEET
1	INSTALLATION OF EXISTING 12" OF REMOVED PIPE MOUNTS.	62.0±	63.0±	S-1
2	INSTALLATION OF NEW MOUNT PIPE EXTENSIONS. [1]	60.0±	62.0±	S-1
3	REMOVAL OF TOP 12" OF EXISTING PIPE MOUNT.	60.0±	61.0±	S-1

[1] (2) TOTAL PIPE MOUNTS TO BE EXTENDED.

- APPURTENANCES MAY INTERFERE WITH PROPOSED MODIFICATIONS.
- ALL MODIFICATIONS TO BE INSTALLED CONTINUOUSLY THROUGH EXISTING EQUIPMENT. ALL EXISTING EQUIPMENT NOT TO BE DAMAGED OR TAKEN OFF AIR DURING INSTALLATION.
- ANTENNA & COAX GRAPHICS NOT SHOWN FOR CLARITY. SEE STRUCTURAL ANALYSIS REPORT FOR EXISTING ANTENNA LOADING & COAX CONFIGURATION.

PREPARED BY:
FDH VELOCITEL
ENGINEERING INNOVATION
VELOCITEL, INC., d.b.a. FDH VELOCITEL
6521 MERIDIEN DRIVE RALEIGH, NC 27616
PHONE: 919-755-1012 FAX: 919-755-1031

PREPARED FOR:
velocitel
complete wireless solutions
4164 INNSLAKE DRIVE, SUITE B
GLEN ALLEN, VA 23060
(804) 217-7088

PROFESSIONAL ENGINEER
I hereby certify that this plan, specification, or report was prepared by me or under my direct supervision and that I am a duly Licensed Professional Engineer under the laws of the State of Minnesota.
Print Name: Dennis D. Abel
Signature:
Date 11-13-2015 License # 41120

11/13/15
DENNIS D. ABEL, PE
MINNESOTA LIC. NO. 41120

DRAWN BY:	WJD
CHECKED BY:	MTB
ENG APPV'D:	DDA

SUBMITTALS

DATE	DESCRIPTION	REV
11/13/15	CONSTRUCTION	0

THE INFORMATION CONTAINED IN THIS SET OF DOCUMENTS IS PROPRIETARY BY NATURE. REPRODUCTION OR CAUSING TO BE REPRODUCED THE WHOLE OR ANY PART OF THESE DRAWINGS WITHOUT THE PERMISSION OF FDH VELOCITEL IS PROHIBITED.

FDH PROJECT NUMBER:
15CCQF2400

SITE NAME:
SHOREVIEW

SITE NUMBER:
100807-A

SITE ADDRESS:
3900 BETHEL DRIVE
SAINT PAUL, MN 55112

SHEET TITLE
MODIFICATION SCHEDULE & MOUNT PIPE EXTENSION INSTALLATION DETAILS

SHEET NUMBER
S-1

velocitel
complete wireless solutions

Attachment D

at&t

Shoreview - 10116081
Existing East View of Antenna Location

velocitel
complete wireless solutions

at&t

Shoreview - 10116081
Proposed East View of Antenna Location

Shoreview - 10116081
Existing North East View of Antenna Location

Shoreview - 10116081
Proposed North East View of Antenna Location

Shoreview - 10116081
Existing South East View of Antenna Location

Shoreview - 10116081
Proposed South East View of Antenna Location

Shoreview - 10116081
Existing West View of Antenna Location

Shoreview - 10116081
Proposed West View of Antenna Location

ARDEN HILLS

MEMORANDUM

DATE: January 6, 2016 PC Agenda Item **4.A**

TO: Planning Commission

FROM: Matthew Bachler, Associate Planner

SUBJECT: **Report from the City Council**

December 14, 2015, City Council Regular Meeting

The City Council adopted the budget for 2016 and set the final levy for taxes payable at their Regular Meeting on December 14, 2015. The adopted budget was in the amount of $11,527,350. The tax levy was increased by 3.5 percent for a total taxes payable amount of $3,478.775.

The City Council also approved Ordinance Number 2015-009 amending the public use dedication requirements in Section 1130.08 of the City Code. The purpose of the amendment was to ensure that sufficient resources will be available for park development on TCAAP, to clarify park dedication requirements throughout the City, and to affirm that these requirements may apply to redevelopment or reuse projects. The Planning Commission reviewed this item at their meeting on December 9, 2015, and recommended approval (5-1, Zimmerman).

December 21, 2015, City Council Work Session

Representatives from Ramsey County and Xcel Energy presented preliminary plans for a proposed solar photovoltaic array on the Primer Tracer Area on AHATS at the Work Session on December 21, 2015. The proposed solar array would cover approximately 40 acres and generate between 5 and 8 megawatts of power. City staff provided an overview of changes to the Zoning Code that would need to be completed to accommodate the solar array development on the property.

The City Council continued their discussion on possible revisions to the Zoning Code to address thrift store businesses in the City. Staff presented findings on characteristics unique to these types of businesses that distinguish them from other retail uses. Proposed conditional use permit criteria for thrift stores were reviewed and the City Council discussed in what Zoning Districts thrift stores should be a permitted, conditional use, or not permitted.