Mayor:
David Grant

Councilmembers:
Brenda Holden
Fran Holmes
Dave McClung
Vacant

Regular City Council Agenda
January 25, 2016
7:00 p.m.
City Hall

Address:
1245 W Highway 96
Arden Hills MN 55112

Phone:
651-792-7800

Website:
www.cityofardenhills.org

City Vision

Arden Hills is a strong community that values its unique environmental setting, strong residential neighborhoods, vital business community, well-maintained infrastructure, fiscal soundness, and our long-standing tradition as a desirable City in which to live, work, and play.

CALL TO ORDER

1. APPROVAL OF AGENDA

2. PRESENTATION

2.A. Appointment Of Jonathan Wicklund To City Council - Oath Of Office

Amy Dietl, City Clerk

Documents: MEMO.PDF

2.B. Twin Cities North Chamber Of Commerce

Jill Hutmacher, Community Development Director
Todd Kruse (President/CEO of Twin Cities North Chamber of Commerce)

Documents: MEMO.PDF

3. PUBLIC INQUIRIES/INFORMATIONAL

Public inquiries/informational is an opportunity for citizens to bring to the Council's attention any items not currently on the agenda. In addressing the Council, please state your name and address for the record, and a brief summary of the specific item being addressed to the Council. To allow adequate time for each person wishing to address the Council, we ask that individuals limit their comments to three (3) minutes. Written documents may be distributed to the Council prior to the meeting, or as bench copies, to allow a more timely presentation.

4. STAFF COMMENTS

4.A. TCAAP Update

Jill Hutmacher, Community Development Director

Documents: MEMO.PDF

5. APPROVAL OF MINUTES

5.A. December 21, 2015, City Council Work Session

Documents: 12-21-15-WS.PDF

5.B. December 21, 2015, Special Regular City Council

Documents: 12-21-15-R.PDF

6. CONSENT CALENDAR

Those items listed under the Consent Calendar are considered to be routine by the City Council and will be enacted by one motion under a Consent Calendar format. There will be no separate discussion of these items, unless a Councilmember so requests, in which event, the item will be removed from the general order of business and considered separately in its normal sequence on the agenda.

6.A. Claims And Payroll

Sue Iverson, Director of Finance and Administrative Services
Dave Perrault, Finance Analyst

Documents: MEMO.PDF

6.B. Resolution 2016-005 - Approval Of Posting No Parking Signs On Sandeen Road

Matthew Bachler, Senior Planner

Documents: MEMO.PDF, ATTACHMENT A.PDF, ATTACHMENT B.PDF, ATTACHMENT C.PDF, ATTACHMENT D.PDF

6.C. Planning Case 15-025 - AT&T Wireless Antenna CUP Amendment - 3900 Bethel Drive

Matthew Bachler, Senior Planner

Documents: MEMO.PDF, ATTACHMENT A.PDF, ATTACHMENT B.PDF, ATTACHMENT C.PDF, ATTACHMENT D.PDF, ATTACHMENT E.PDF, ATTACHMENT F.PDF, ATTACHMENT G.PDF, ATTACHMENT H.PDF

6.D. Planning Case 15-026 - Development Agreement Determination Letter - 3177 Shoreline Lane

Matthew Bachler, Senior Planner

Documents: MEMO.PDF, ATTACHMENT A.PDF, ATTACHMENT B.PDF, ATTACHMENT C.PDF, ATTACHMENT D.PDF

6.E. 2016 Employee Compensation Plan - Non-Union Employees

Amy Dietl, City Clerk
Dave Perrault, Finance Analyst

Documents: MEMO.PDF, ATTACHMENT A.PDF, ATTACHMENT B.PDF, ATTACHMENT C.PDF

6.F. Ramsey Conservation District - Shared Services Agreement

John Anderson, Acting Public Works Director

Documents: MEMO.PDF, ATTACHMENT A.PDF

6.G. Approval Of Lake Johanna Fire Department Capital Expenditures

Dave Perrault, Finance Analyst

Documents: MEMO2.PDF, ATTACHMENT A.PDF

6.H. Rice Creek Commons (TCAAP) Goals And Metrics

Jill Hutmacher, Community Development Director

Documents: MEMO.PDF, ATTACHMENT.PDF

7. PULLED CONSENT ITEMS

Those items that are pulled from the Consent Calendar will be removed from the general order of business and considered separately in its normal sequence on the agenda.

8. PUBLIC HEARINGS

9. NEW BUSINESS

10. UNFINISHED BUSINESS

11. COUNCIL COMMENTS

12. PUBLIC HEARINGS

ADJOURN

PRESENTATION – 2A

ARDEN HILLS

MEMORANDUM

DATE: **January 25, 2016**

TO: **Honorable Mayor and City Councilmembers**

FROM: **Amy Dietl, City Clerk**

SUBJECT: **Appointment of Jonathan Wicklund to City Council**

Background

Due to the unexpected passing of Councilmember Robert Woodburn on October 2, 2015, a vacancy exists on the City Council that needs to be filled by Council appointment until an election is held.

At the Council's direction, staff solicited and received applications. The City Council conducted interviews on January 11, and January 13, 2016. All seven applicants were interviewed, and after City Council discussion on January 19, 2016, it was the consensus of the Council to appoint Jonathan Wicklund to the vacant seat.

Since more than two years remain in the unexpired term, under state law the seat will be up for re-election in November 2016 for a special two-year term. Consequently, the appointment will run from January 2016 through December 2016.

Council Action

A motion to appoint Jonathan Wicklund to the Arden Hills City Council effective upon taking the Oath of Office. This Council term to expire December 31, 2016.

ARDEN HILLS

MEMORANDUM

DATE: January 25, 2016

TO: Honorable Mayor and City Councilmembers
Sue Iverson, Acting City Administrator

FROM: Jill Hutmacher, Community Development Director

SUBJECT: Twin Cities North Chamber of Commerce

Discussion

Todd Kruse, President and CEO of Twin Cities North Chamber of Commerce, will present information on the Twin Cities North Chamber and the services and assistance that it can provide to the City.

ARDEN HILLS

MEMORANDUM

DATE: January 25, 2016

TO: Honorable Mayor and City Councilmembers
Sue Iverson, Acting City Administrator

FROM: Jill Hutmacher, Community Development Director

SUBJECT: Rice Creek Commons (TCAAP) Update

The Ramsey County Board of Commissioners voted to approve the TCAAP Master Plan on Tuesday, January 19, 2016. Ramsey County's approval of the Master Plan was required by the terms of the TCAAP Joint Powers Agreement in order to fully implement the TCAAP Joint Development Authority.

At its meeting on January 4, 2016, the Joint Development Authority reviewed and approved the *Solicitation for Master Developer* for release on February 1, 2016.

The schedule for the selection of a Master Developer is as follows:

Solicitation released	Feb 1, 2016
Pre-proposal conference and site tour	Feb 11, 2016
Deadline for submission of questions	TBD
Response to questions posted	TBD
Solicitation responses due	Mar 2, 2016
Solicitation Review Committee evaluation and shortlist	Mar 18, 2016
Deadline for submission of additional information	Mar 24, 2016
Evaluation, interviews, and recommendation to the JDA	Mar 31, 2016
JDA selects master developer	Apr 4, 2016

At its next meeting on February 1, 2016, the JDA will discuss the membership of the Solicitation Review Committee.

DRAFT

Approved: January 25, 2016

CITY OF ARDEN HILLS, MINNESOTA
CITY COUNCIL WORK SESSION
DECEMBER 21, 2015
5:00 PM - ARDEN HILLS CITY COUNCIL CHAMBERS

At 5:00 pm, Councilmember McClung indicated that Mayor Grant was on his way to the meeting, as was Councilmember Holden, therefore there currently was not a Quorum. Upon Councilmember Holden's arrival, the Council was directed to proceed with hearing Agenda Item 1.A. Ramsey County Transportation Update. The meeting was to officially be Called to Order upon the arrival of the Mayor, and there then would be a Quorum made up of Mayor Grant, Councilmember McClung and Councilmember Holden.

CALL TO ORDER/ROLL CALL

Pursuant to due call and notice thereof, Mayor David Grant called to order the City Council work session at 5:36 p.m.

Present: Mayor David Grant (arrived at 5:36 pm); Councilmember Brenda Holden (arrived at 5:06) and Councilmember Dave McClung

Absent: Councilmember Fran Holmes (Excused)

Also present: Acting City Administrator and Director of Finance and Administrative Services Sue Iverson; Public Works Director John Anderson; Community Development Director Jill Hutmacher; Joe Lux, Ramsey County Senior Planner; Josh Olson, Ramsey County Community and Economic Development; Paul Lehman, Xcel Energy; Jerry Dittmann, Xcel Energy; City Planner Ryan Streff; Associate Planner Matthew Bachler; and Deputy Clerk Julie Hanson

1. AGENDA ITEMS

A. Ramsey County Transportation Update

Joe Lux, Ramsey County Senior Planner, indicated in the spring of 2016, a right turn lane will be added on northbound Lexington Avenue for eastbound I-694 traffic, and also a right turn lane will be added on southbound Lexington Avenue for westbound I-694 traffic. He said that MnDOT created a model that showed improvement in operations but noted that this area is complicated by the Red Fox Road westbound right turn traffic volume. He also said Ramsey County is considering the installation of a right turn, red arrow at the traffic signal (for westbound traffic on Red Fox Road at Lexington Avenue) and that this will be further reviewed with the County's technicians.

Joe Lux stated that Phase 3 of the Roberts Development (located at the southwest corner of Red Fox Road and Lexington Avenue) shows all but one access to Lexington Avenue closed. The remaining access point would be opposite to Target's south entrance. He said that Ramsey County performed a study and traffic modeling and determined a traffic signal will work, but there are functionality concerns due to the close proximity to Grey Fox Road.

Joe Lux also stated there is no cost estimate yet for this work, but expects a partnership between Ramsey County, Roberts Development, and the cities of Arden Hills and Shoreview. He stated the County will provide design and construction engineering and that they are currently working on a proposal.

Councilmember Holden asked for clarification regarding "No Right Turn" on red at the north end of Target on Red Fox Road.

Joe Lux stated a sign would not be effective as most drivers would not comply with the restriction and it could cause further traffic issues on Red Fox Road, but that a red arrow is possible that would operate while eastbound traffic on Red Fox Road has a left turn green arrow.

Councilmember Holden requested a timeframe for completion of this work.

Joe Lux stated that utility relocations and clearing have begun and the project should resume in the spring of 2016. He noted that coordination between Ramsey County and MnDOT will be necessary due to the I-694 project. He will provide an update to John Anderson, Acting Public Works Director, in approximately one week.

Councilmember McClung asked about a timeline regarding a signalized light at the south entrance of Target.

A discussion ensued regarding a potential timeline of between three and five years regarding signal installation at Target's south entrance.

Joe Lux left the meeting at approximately 5:20 pm.

B. Solar Photovoltaic (PV) Array – Primer Tracer Area Discussion

City Planner Streff introduced presenters Josh Olson of Ramsey County, and Paul Lehman and Jerry Dittmann of Xcel Energy.

City Planner Streff stated that Ramsey County is working with the General Services Administration (GSA) to secure 62 acres of land, known as the Primer Tracer Area, for a 5 to 8 megawatt solar array development and potential State Emergency Management Center. The solar array area is proposed on the eastern 40 acres of that area. City staff determined that in order to proceed with the application for this development, the following changes to the City's Zoning Code are required:

- Rezone the Primer Tracer Area from R-1 Single Family Residential to Conservation District (CD) to correspond with the Comprehensive Plan and Future Land Use Map.

- Text Amendment to define a Solar Energy System and revise the purpose of the Conservation District (CD).
- Text Amendment to add Solar Energy System to the Land Use Chart and include design standards for solar developments.

City Planner Streff noted that the City was preparing to rezone the Primer Tracer Area to a Conservation District in 2014; however, because Ramsey County was in negotiations with the Federal Government, it was decided the City would pursue rezoning at a future date following acquisition of the property by Ramsey County.

Councilmember Holden asked if Xcel Energy submitted a proposal to the State of Minnesota.

Paul Lehman stated he is not familiar with that particular RFP but does not believe so.

Community Development Director Hutmacher stated that Xcel and Ramsey County wanted to be made aware of any City Council concerns regarding rezoning for the Primer Tracer Area. She noted the proposed approach to the rezoning was also discussed with the City Attorney.

Josh Olson, Ramsey County Community and Economic Development, indicated Paul Lehmann and Jerry Dittman of Xcel Energy would provide more detailed information regarding technical aspects and associated policies pertaining to solar arrays. He stated the concept for the solar array in the Primer Tracer Area stemmed from work performed cooperatively by the Joint Development Authority (JDA) and the Energy Resilience Advisory Board (ERAB). This framework was the foundation for the Energy Integration Resiliency Framework (EIRF) and was adopted by the JDA in April 2015. The EIRF identified two time sensitive opportunities: solar PV array proposed in the Primer Tracer Area and capturing thermal energy from the Army's ground water treatment system for heating and cooling of future development within Rice Creek Commons.

Josh Olson stated that Ramsey County is currently negotiating with the GSA and feels progress is being made. He said that access for utilities and vehicles will be a challenge and that there will be some remediation necessary for this site. He also indicated that the Federal tax credit that was associated with this project was set to expire at the end of 2016 but has now been extended.

Mayor Grant asked if there were any changes to the work session agenda.

Councilmember Holden stated she would like to table Agenda Item 1.D. Outdoor Display and Sales Zoning Regulations until a future work session.

Mayor Grant tabled Agenda Item 1.A. Ramsey County Transportation Update as the presentation occurred earlier in the evening.

Councilmember McClung had no changes to the work session agenda.

Mayor Grant stated the work session agenda was adopted as not containing Agenda Items 1.A. and 1.D.

Discussion returned to the solar array project.

Councilmember Holden asked for clarification as to when the Primer Tracer Area was cleaned to industrial standards.

Community Development Director Hutmacher asked if the site had been cleaned to the Army's industrial standards negotiated as part of the Superfund agreement in the 1980's or to the MPCA's current industrial standards.

Josh Olson said he was not certain.

Mayor Grant asked who the owner of the Primer Tracer Property will be and it was stated that Ramsey County would hold ownership. He then asked if the site would be reviewed by the EPA and the MPCA since it will not be federally owned.

Councilmember Holden asked to what standard the site would need to be cleaned – commercial, industrial, etc.

Paul Lehman of Xcel Energy introduced himself to Mayor Grant and stated he is the manager of Community Energy Partnerships. He stated it is too early in the process and an environmental review had not yet taken place.

A short discussion ensued regarding Ramsey County's purchase of the Primer Tracer Area property.

Paul Lehman stated that at present, analytical work is being performed to determine the possibilities for the project.

Mayor Grant asked if the County would approach the City to request improvements.

Community Development Director Hutmacher stated that zoning changes would be necessary.

A discussion ensued regarding amending the Zoning Code to align with the Comprehensive Plan.

A discussion ensued regarding the extension to the energy tax credits.

Paul Lehman provided several examples of other successful solar array sites.

Mayor Grant asked for a project timeline.

Paul Lehman stated 2017 is tentatively targeted but due to the tax credit extension of five years, there is no longer an aggressive timeline and so there is flexibility.

Paul Lehman and **Jerry Dittman** left the meeting at approximately 6:00 pm.

Councilmember Holden asked if the Council had any objections to changing the Zoning Code, as she did not have any objections.

Mayor Grant stated he did not expect the Council to have any objections.

A discussion ensued regarding how the solar array project would fit in with TCAAP and providing power to that development area.

C. Sandeen Road On-Street Parking

Associate Planner Bachler stated City staff had received a concern from a resident regarding on-street parking on Sandeen Road. He said there were also concerns regarding emergency vehicle access in addition to Public Works staff concerns regarding difficulties with snow removal. He stated that staff mailed a survey to residents along Sandeen Road in October to gather information on current needs for street parking and to determine if there would be support to limit street parking on Sandeen Road. The survey results indicated most residents occasionally use on-street parking, with two properties showing regular use of on-street parking. He said the City continues to work with the Ramsey County Sheriff's Department to enforce parking regulations.

Associate Planner Bachler stated that City staff recommends posting no parking signs near the northern intersection of Sandeen Road with Lake Johanna Boulevard. He stated the properties located at 3280 Sandeen Road and 3290 Lake Johanna Boulevard reported daily on-street parking and that 3290 Lake Johanna Boulevard operates an in-home business and uses on-street parking for employees and clients. He also said that City staff will communicate directly with these two properties regarding the parking regulations.

Associate Planner Bachler asked for feedback from the City Council.

A discussion ensued regarding clarification of safety issues as they pertain to emergency vehicles on Sandeen Road, the characteristics of this road and the properties thereon, and suggested solutions for parking issues.

Associate Planner Bachler stated staff will work with the Public Works department to post no parking signs along the curve on Sandeen Road, work with the Sheriff's department to step up enforcement, and work closely with the two properties that utilize on-street parking.

Acting Public Works Director Anderson stated it would be helpful to Public Works if the curve on Sandeen Road allowed more space for plowing. He suggested posting no parking signs on both sides of Sandeen Road to the southerly properly line of 3290 Lake Johanna Boulevard.

Mayor Grant requested that both the Police and Fire departments be consulted regarding the proposed change, and that they concur before any signs are posted.

Community Development Director Hutmacher stated staff will consult with the City Attorney regarding compliance of the property with the home business located at 3290 Lake Johanna Boulevard.

D. Outdoor Display and Sales Zoning Regulations

Councilmember Holden requested this item be tabled until a later date in order for Councilmember Holmes to be present for the discussion.

E. Retail and Thrift Store (Resale) Establishments Discussion

City Planner Streff requested the Council provide direction regarding a potential revision to the Zoning Code as it pertains to Retail Sales and Service and Thrift Store (Resale) businesses. He stated per the City Attorney's recommendation, City staff created two separate distinct definitions to clarify the difference between "Retail Sales and Service" and "Thrift Store" establishments.

City Planner Streff asked if the Council supports creating a new land use category and CUP criteria for Thrift Stores and if so, in which Zoning Districts should Thrift Stores be permitted, conditional or not permitted.

A discussion ensued regarding how other cities have addressed their zoning challenges, current Arden Hills' Zoning District descriptions, and potential Zoning Code changes.

The City Council agreed that B4 is the recommended Zoning District that will permit Thrift Stores as a conditional use.

A short discussion ensued regarding the City's CUP guidelines, Accessory Use definition and the IFlex Zoning District.

F. Kimley-Horn Master Plan Contract Completion

Community Development Director Hutmacher indicated the Kimley-Horn Master Plan contract that was approved by the City Council on April 29, 2013, had three primary components which have been satisfactorily completed. Some of the subcomponents have not been completed and will be addressed later during the TCAAP redevelopment. Kimley-Horn is requesting final payment on the contract in the amount of $5,650.28.

Councilmember Holden asked about the reference in the November 17, 2015, memo from Kimley-Horn, regarding "additional scenarios to assess County Road I access" as she did not remember the Council requesting this.

Acting Public Works Director Anderson stated the additional modeling was related to the Alternative Urban Areawide Review (AUAR).

A discussion ensued regarding the streetscape-related items that were not completed per the contract and what these items entail.

Community Development Director Hutmacher asked if the Council would be prepared to issue final payment on the contract if Kimley-Horn can provide estimates regarding annual maintenance and right-of-way costs as well as pond maintenance costs.

A discussion ensued regarding utilizing a single garbage hauler in the TCAAP area. The Council directed staff to collect more information regarding this as well as the costs for the various maintenance items.

G. Prioritization of TCAAP Goals

Mayor Grant stated at the JDA meeting on November 2, 2015, the City's and County's goals were discussed and each were asked to prioritize these goals.

Community Development Director Hutmacher said the County will not be able to prioritize their goals by the January 4, 2016, JDA meeting.

Councilmember McClung stated that because the County has not completed their prioritization and considering Arden Hills is short two councilmembers (between one vacancy and Councilmember Holmes not present at this meeting), he would like to wait for Councilmember Holmes to be present and for the appointment of the new councilmember so as to solicit his or her input.

Councilmember McClung stated in his opinion the County wears two hats; one as a governmental entity and one as a developer. He is interested in the County's approach as a governmental entity because the developer aspect can affect their prioritization of goals. He would like to see a list from the County which is endorsed by their Board as to their goals and priorities, in priority order.

It was decided the Council will wait until they are at full complement to complete their prioritized goals.

H. Discussion Regarding Appointing Council Liaisons to Commissions and Committees

A discussion ensued regarding the various Council liaison appointments. The following lists the 2016 assignments:

Planning Commission – Mayor Grant
Parks, Trails and Recreation Committee – Councilmember Holmes
Communications Committee – New councilmember
Financial Planning and Analysis Committee – Councilmember McClung
Lake Johanna Fire Department Board of Directors – Councilmember McClung
Economic Development Committee – Councilmember Holden
Personnel Committee – Mayor Grant and Councilmember Holden
Ramsey County League – New councilmember

Mayor Grant indicated the Mayor Pro Tem will be addressed later.

I. 2016 Employee Compensation Plan – Non-Union Employees

Mayor Grant indicated the non-union COLA was budgeted at 3% and previously tabled for further discussion.

Councilmember Holden stated she would like to wait until union negotiations are complete before moving forward with this item.

Interim City Administrator Iverson stated the City was waiting to hear back from the Union regarding a proposed date to complete negotiations.

The Council agreed to table this item until the January 19, 2016, work session and if approved, non-union and seasonal staff's COLA will be retroactive to January 1, 2016.

J. 2016 City Contribution for Employee Benefits

The City Council requested this item be placed on the Consent Agenda at the January 11, 2016, meeting.

The City Council discussed comments relating to a fire station, the Employee Appreciation luncheon and the County Road E bridge.

ADJOURN

Mayor Grant adjourned the City Council work session at 7:15 p.m.

Julie Hanson	David Grant
Deputy Clerk	Mayor

DRAFT

Approved: January 25, 2016

CITY OF ARDEN HILLS, MINNESOTA
SPECIAL REGULAR CITY COUNCIL MEETING
DECEMBER 21, 2015
7:00 P.M. - ARDEN HILLS CITY COUNCIL CHAMBERS

CALL TO ORDER/ROLL CALL

Pursuant to due call and notice thereof, Mayor David Grant called to order the special regular City Council meeting at 7:15 p.m.

Present: Mayor David Grant, Councilmembers Brenda Holden and Dave McClung

Absent: Councilmember Fran Holmes (Excused)

Also present: Acting City Administrator Sue Iverson; Community Development Director Jill Hutmacher; Acting Public Works Director John Anderson; City Planner Ryan Streff; Associate Planner Matthew Bachler; and Deputy Clerk Julie Hanson

1. CONSENT CALENDAR

Councilmember Holden requested that Item1B be removed from the Consent agenda, moving the Step and Grade Change for Associate Planner to Pulled Consent Item 2A.

Councilmember McClung moved approval of the Consent calendar and authorized the Mayor and staff to execute all items contained therein.

MOTION: **Councilmember McClung moved and Councilmember Holden seconded a motion to approve the meeting agenda as amended. The motion carried unanimously (3-0).**

2. PULLED CONSENT ITEMS

A short discussion ensued regarding the amended recommendation to this item by the Personnel Committee.

MOTION: **Councilmember McClung moved and Councilmember Holden seconded a motion to approve moving Associate Planner Bachler to the position of Senior Planner, Grade 13 – Step 2 effective January 1, 2016. The motion carried unanimously (3-0).**

ADJOURN

MOTION: **Councilmember McClung moved and Councilmember Holden seconded a motion to adjourn. The motion carried unanimously (3-0).**

Mayor Grant adjourned the regular City Council meeting at 7:18 p.m.

Julie Hanson	David Grant
Deputy Clerk	Mayor

CONSENT ITEM 6A

ARDEN HILLS

MEMORANDUM

DATE: January 25, 2016

TO: Honorable Mayor and City Council Members

FROM: Sue Iverson, Director of Finance and Administrative Services,
Dave Perrault, Finance Analyst

SUBJECT: Claims & Payroll

Requested Action:

1. **Motion to Approve Consent Agenda Item – Claims and Payroll**

Supporting Documents:

Payroll

2016 Payroll #1	$	93,425.12
Total Payroll	**$**	**93,425.12**

Accounts Payable Claims Through 01/22/2016

Paid Claims (Check No 45393-Check No 45399)	$	3,277.33
Paid Claims (Check No 45400-Check No 45402)	$	27,322.60
Paid Claims (Check No 45403-Check No 45420)	$	562,469.33
Paid Claims (Check No 45421)	$	304,159.76
Total Accounts Payable	**$**	**897,229.02**
Total Claims	**$**	**990,654.14**

CITY OF ARDEN HILLS
PAYROLL # 1
CHECKS DATED: **01/15/16**
Biweekly: -

EMPLOYEE DEDUCTIONS	AMT.	CITY BENEFIT	Payment Method
FIT	6,531.07		EFT
SIT	2,658.96		EFT
FICA Oasdi	3,827.75	3,827.75	EFT
FICA Medicare	895.18	895.48	EFT
TOTAL TAXES	**13,912.96**	**4,723.23**	
Health Premium	2,079.53	13,936.45	A/P Check*
Dental Premium		1,179.98	A/P Check*
FSA Health Care Reimb.	133.33		A/P Check*
FSA Dependent Care Reimb.	208.33		A/P Check*
TOTAL FLEXIBLE SPENDING	**2,421.19**	**15,116.43**	
HSA Health Saving	627.59	1,554.17	
Health Care Savings Plan			EFT
Health Care Savings Plan-2%	289.01		EFT
Health Care Savings Plan-4%	653.34		EFT
TOTAL HEALTH SAVINGS	**1,569.94**	**1,554.17**	
PERA	4,212.98	4,861.14	EFT
ICMA	1,626.41	0.00	EFT
Central Pension Fund-Union	614.40		A/P Check*
MN State Retirement System	687.41		EFT
TOTAL RETIREMENT	**7,141.20**	**4,861.14**	
IUOE 49 Dues (Union)	134.00		A/P Check*
LTD/STD Insurance	1,113.61		A/P Check*
PERA Life Insurance	32.00		A/P Check*
Life/Addl/Dep Life	117.40	88.80	A/P Check*
Public Employee Long Term Care	93.72		A/P Check*
UNUM	42.55		A/P Check*
AFLAC	199.56		EFT
Avesis-Vision Care	5.43		A/P Check*
TOTAL VOLUNTARY	**1,738.27**	**88.80**	

Total Employee Deductions	26,783.56
Net Payroll	
Direct Deposit	39,144.92
Gross Payroll Tie-Out	65,967.74
STD/LTD Gross - Up	1,113.61
Plus City Paid Benefit	26,343.77
ICMA Benefit Held	0.00
TOTAL PAYROLL COST	**93,425.12**

EFT

FICA TIE-OUT	
Gross Payroll	65,967.74
Less Total FSA	2,421.19
Plus Employer Match ICMA	0.00
Plus ICMA Benefit Held	0.00
Net P/R Subject to FICA	63,546.55
FICA Oasdi @ 6.20%	3,827.75
FICA Medicare @ 1.45%	895.18

Note: Federal and State Payroll Tax obligations are satisfied by means of utilizing the "Taxtel" Electronic Tax Deposit Service. Transfers are typically made two business days after the payroll date.

* A/P Checks can be found on the *ACCOUNTS PAYABLE Check Approval* report. Checks may be paid this week or the following week.

Accounts Payable

Checks by Date - Detail by Check Date

User: dave.perrault
Printed: 1/20/2016 2:32 PM

Check No	Vendor No / Invoice No	Vendor Name / Description	Check Date / Reference	Check Amount
ACH	0225	Lillie Suburban Newspapers	01/21/2016	
	20151231LSN	December Charges	December Charges	47.25
	20151231LSN	December Charges	December Charges	25.20
	20151231LSN	December Charges	December Charges	88.20
	20151231LSN	December Charges	December Charges	82.43
	20151231LSN	December Charges	December Charges	40.95
			Total for this ACH Check for Vendor 0225:	284.03
ACH	5025	Sara Grant	01/21/2016	
	20151231Grant	Dec 2015 Expense Reimb	Dec 2015 Expense Reimb	52.92
	20151231Grant	Dec 2015 Expense Reimb	Dec 2015 Expense Reimb	53.20
			Total for this ACH Check for Vendor 5025:	106.12
ACH	JOHC	Johnson Controls	01/21/2016	
	128110533571	December Charges	December Charges	425.60
			Total for this ACH Check for Vendor JOHC:	425.60
ACH	TCCC	Twin Cities North Chamber of Commerce	01/21/2016	
	201599	TCNCC Contract	TCNCC Contract	415.00
			Total for this ACH Check for Vendor TCCC:	415.00
ACH	0192	Grainger, Inc	01/21/2016	
	9933464647	Maint/Repair	Maint/Repair	29.22
			Total for this ACH Check for Vendor 0192:	29.22
ACH	0339	Ferguson Waterworks 2516	01/21/2016	
	0178843	Repairs/Maint	Repairs/Maint	314.66
	0178944	Repairs/Maint	Repairs/Maint	2,424.68
	0178948	Repairs/Maint	Repairs/Maint	206.44
	0178967	Repairs/Maint		280.60
			Total for this ACH Check for Vendor 0339:	3,226.38
ACH	0381	ICMA Retirement Corporation	01/21/2016	
	16137	Annual Plan Fee	Annual Plan Fee	250.00
			Total for this ACH Check for Vendor 0381:	250.00
ACH	0387	ICMA Retirement Trust- #302482	01/21/2016	
		PR Batch 00001.01.2016 ICMA Employee Dedu	PR Batch 00001.01.2016 ICM	775.00
		PR Batch 00001.01.2016 ICMA Employee Perce	PR Batch 00001.01.2016 ICM	851.41
			Total for this ACH Check for Vendor 0387:	1,626.41
ACH	0413	Newman Traffic Signs	01/21/2016	
	TI0293787	Streets Parts	Streets Parts	58.98

Check No	Vendor No Invoice No	Vendor Name Description	Check Date Reference	Check Amount
			Total for this ACH Check for Vendor 0413:	58.98
ACH	1041	Aaron Thelen	01/21/2016	
	20160119THEL	Thelen Expense Reimbursment	Expense Reimbursment	11.76
			Total for this ACH Check for Vendor 1041:	11.76
ACH	1223	Adam's Pest Control, Inc.	01/21/2016	
	2365063	Pest Control Services	Pest Control Services	62.54
			Total for this ACH Check for Vendor 1223:	62.54
ACH	1330	MN CLN SERVICES LLC	01/21/2016	
	0116NN01	Cleaning Services	Cleaning Services	1,478.75
			Total for this ACH Check for Vendor 1330:	1,478.75
ACH	2226	Sharrow Lifting Products	01/21/2016	
	95528	PW Maint	PW Maint	8.25
			Total for this ACH Check for Vendor 2226:	8.25
ACH	3964	Advanced First Aid Inc	01/21/2016	
	0116537	Replacement of First Aid Equipment	Replacement of First Aid Equ	135.00
			Total for this ACH Check for Vendor 3964:	135.00
ACH	4889	Community Footworks	01/21/2016	
	01052016	January Invoice Foot Clinic	January Invoice Foot Clinic	326.40
			Total for this ACH Check for Vendor 4889:	326.40
ACH	5596	Jamar Company	01/21/2016	
	449131	PW Parts	PW Parts	40.18
			Total for this ACH Check for Vendor 5596:	40.18
ACH	5599	Frontier Precision, Inc	01/21/2016	
	20160120Chris	Christofore Training	Christofore Training	550.00
			Total for this ACH Check for Vendor 5599:	550.00
ACH	5648	Matthew Bachler	01/21/2016	
	20160121BACH	Bachler Expense Report	Expense Reimbursement	21.62
	20160121BACH	Bachler Expense Report	Expense Reimbursement	40.00
			Total for this ACH Check for Vendor 5648:	61.62
ACH	5665	Metering & Technology Solution	01/21/2016	
	5327	Repairs/Maint	Repairs/Maint	100.00
			Total for this ACH Check for Vendor 5665:	100.00
ACH	7084	OmniSite	01/21/2016	
	47944	Lift Station Reporting	LIft Station Reporting	1,932.00
	47944	Lift Station Reporting	LIft Station Reporting	1,932.00
			Total for this ACH Check for Vendor 7084:	3,864.00
ACH	0243	Metropolitan Council-Waste Water	01/21/2016	
	0001051005	Wastewater Charges	Wastewater Charges	56,551.77

Check No	Vendor No Invoice No	Vendor Name Description	Check Date Reference	Check Amount
			Total for this ACH Check for Vendor 0243:	56,551.77
45393	6047	Avesis Third Party Administrators, Inc	01/21/2016	
	1142679	January 2016 Premium	January Premium	10.86
			Total for Check Number 45393:	10.86
45394	0296	City of Arden Hills	01/21/2016	
	20151231PC	December 2015 Petty Cash Reimb	Petty Cash Reimb Dec 2015	16.73
	20151231PC	December 2015 Petty Cash Reimb	Petty Cash Reimb Dec 2015	124.56
			Total for Check Number 45394:	141.29
45395	0342	City of Shoreview	01/21/2016	
	5656	Shoreview Semaphore billing	Shoreview Semaphore billing	276.78
			Total for Check Number 45395:	276.78
45396	NSCC	North Suburban Communications Commiss	01/21/2016	
	15-185	North Suburbs CC December Charges 2015	North Suburbs CC December	257.40
	15-197	North Suburbs CC December Charges 2015	North Suburbs CC December	696.54
			Total for Check Number 45396:	953.94
45397	3100	Provident Life and Accident Ins Co	01/21/2016	
	E0471136	December Premium	December Premiums	85.10
			Total for Check Number 45397:	85.10
45398	0811	Ramsey County	01/21/2016	
	PUBW015251	2015 Bridge Inspections	2015 Bridge Inspections	190.00
			Total for Check Number 45398:	190.00
45399	0925	T-Mobile	01/21/2016	
	20161231TMOB	December 2015 Tablet Charges	December 2015 Tablet Charge	388.61
			Total for Check Number 45399:	388.61
45400	0342	City of Shoreview	01/21/2016	
	5646	Fall 2015 Clean UP Day	Fall 2015 Clean UP Day	8,231.22
			Total for Check Number 45400:	8,231.22
45401	1706	M-R Sign Co., Inc	01/21/2016	
	189274	Street Signs	Street Signs	11,522.44
			Total for Check Number 45401:	11,522.44
45402	0282	Republic Services #899	01/21/2016	
	0899002785537	December Services	December Services	7,568.94
			Total for Check Number 45402:	7,568.94
45403	2597	AARP	01/21/2016	
	01052015	AARP Stouten	AARP Stouten	70.00
			Total for Check Number 45403:	70.00
45404	0131	Beisswenger's How-To Store	01/21/2016	
	689342	PW Repairs	PW Parts	56.83
	689469	Repair/Maint	Repair/Maint	194.62

Check No	Vendor No Invoice No	Vendor Name Description	Check Date Reference	Check Amount
	691083	PW Parts	PW Parts	41.59
	691342	PW Repairs	PW Parts	4.36
	691381	PW Repairs	PW Parts	5.26
	691863	PW Repairs	PW Parts	54.23
			Total for Check Number 45404:	356.89
45405	40010	City of New Brighton	01/21/2016	
	2016MVHS	County Rd F/10th st NW Rehab APPROVED B'	County Rd F/10th st NW Reh:	513,577.62
			Total for Check Number 45405:	513,577.62
45406	4372	DLT Solutions, LLC	01/21/2016	
	4481274	Autodesk Infrastructure Suite 2016	Autodesk Infrastructure Suite	1,046.37
			Total for Check Number 45406:	1,046.37
45407	ESRI	ESRI	01/21/2016	
	93078672	2016 ESRI Renewal	2016 ESRI Renewal	3,642.00
			Total for Check Number 45407:	3,642.00
45408	0176	Frattallone's Hardware, Inc.	01/21/2016	
	068611a	Tools	Tools	35.56
			Total for Check Number 45408:	35.56
45409	0447	I.U.O.E Local 49 Benefit Fund-Insurance	01/21/2016	
	FEBUNIINS	Union Insurance February	Union Insurance February	8,480.00
	FEBUNIINS	Union Insurance February	Union Insurance February	1,200.00
			Total for Check Number 45409:	9,680.00
45410	0390	INT'L Union Operating Engineers-Union D	01/21/2016	
	20160108IUOE	Monthly Dues	Monthly Dues	268.00
			Total for Check Number 45410:	268.00
45411	IREK	Kyle Irestone	01/21/2016	
	2016IRESTONE	Escrow Release 2014-01021	Escrow Release 2014-01021	10,000.00
			Total for Check Number 45411:	10,000.00
45412	0147	ISD 621-Mounds View Community Ed	01/21/2016	
	6172	Building Fee	Building Fee	99.90
			Total for Check Number 45412:	99.90
45413	0916	Lakes Country Service Coop	01/21/2016	
	CI073-HA 9	Lakes Country February Premiums	Bluecross Blueshield Feb 201	5,514.00
	CI073-HB 7	Lakes Country February Premiums	Bluecross Blueshield Feb 201	986.00
	CI073-HB 7	Lakes Country February Premiums	Bluecross Blueshield Feb 201	1,972.00
	CI073-HE 1	Lakes Country February Premiums	Bluecross Blueshield Feb 201	403.00
	CI073-HE 1	Lakes Country February Premiums	Bluecross Blueshield Feb 201	1,267.50
			Total for Check Number 45413:	10,142.50
45414	0422	Minnesota Pollution Control Agency	01/21/2016	
	2016MNPCATRNG	Christofore Training MNPCA	Christofore Training MNPCA	300.00
			Total for Check Number 45414:	300.00
45415	8563	Moser Homes, Inc.	01/21/2016	

Check No	Vendor No Invoice No	Vendor Name Description	Check Date Reference	Check Amount
	20160112Moser	Maint and Repair	Maint and Repair	750.00
			Total for Check Number 45415:	750.00
45416	8034 2016MUNI	Municipals 2016 Dues	01/21/2016 Membership Dues	25.00
			Total for Check Number 45416:	25.00
45417	7025 0000190885	On Site Sanitation PW Rental	01/21/2016 PW Rental	156.00
			Total for Check Number 45417:	156.00
45418	1300 0900287030	UniFirst Corporation Mat Service	01/21/2016 Mat Service	87.95
			Total for Check Number 45418:	87.95
45419	9755 OSV338361	Verizon Networkfleet Inc Tech Expenses Fleet	01/21/2016 Tech Expenses Fleet	322.15
			Total for Check Number 45419:	322.15
45420	4709 2016WLTRNG	Warning Lites Training Christofore and Nowlan	01/21/2016 Training Christofore and Now	79.90
			Total for Check Number 45420:	79.90
45421	0495 526	Lake Johanna Fire Department Inc. 2016 1st Quarter Payment LJFD	01/21/2016 2016 1st Quarter Payment LJI	247,607.99
			Total for Check Number 45421:	247,607.99
			Total for 1/21/2016:	897,229.02
			Report Total (50 checks):	897,229.02

CONSENT ITEM – 6B

ARDEN HILLS

MEMORANDUM

DATE: January 25, 2016

TO: Honorable Mayor and City Councilmembers
Sue Iverson, Acting City Administrator

FROM: Matthew Bachler, Senior Planner

SUBJECT: Sandeen Road On-Street Parking Restrictions

Requested Action

Motion to approve Resolution 2016-005 prohibiting the parking of motor vehicles on Sandeen Road from its northern intersection with Lake Johanna Boulevard to approximately 160 feet south at all times.

Background

The City Council discussed possible restrictions for street parking on Sandeen Road at their Work Session on December 21st, 2015. Due to the narrow width of the street, access can be limited when vehicles are parked on both sides of the street. The Public Works Department has identified this as a concern for emergency vehicle access and snow removal.

At the December 21st Work Session, staff recommended that the City post "no parking" signs at the north end of Sandeen Road along both sides of the street extending south approximately 160 feet from the intersection with Lake Johanna Boulevard (Attachment B). There are safety concerns when vehicles are parked along this curved portion of the street because sight lines for drivers are reduced. The City Council directed staff to discuss the proposed parking restrictions with the Lake Johanna Fire Department and Ramsey County Sherriff's Department. Staff has reviewed the proposal with both departments and they have expressed support for the proposal.

Attachments

A. Resolution 2016-005
B. Map of Proposed No Parking Area on Sandeen Road
C. City Council Work Session Staff Report, December 21, 2015
D. Draft City Council Work Session Minutes, December 21, 2015

Attachment A

CITY OF ARDEN HILLS
COUNTY OF RAMSEY
STATE OF MINNESOTA

RESOLUTION NO. 2016-005

A RESOLUTION
ADOPTING A NO-PARKING PROVISION
FOR SANDEEN ROAD

WHEREAS, Sandeen Road is a public street that does not conform to the minimum street width requirements included in Section 1130.03, Subd. 1 of the City Code, and

WHEREAS, due to the narrow pavement width of Sandeen Road access can be limited when vehicles are parked on both sides of the street, and

WHEREAS, public safety concerns exist when vehicles are parked along the curved portion of the street that extends south approximately 160 feet from the intersection with Lake Johanna Boulevard.

THEREFORE BE IT RESOLVED, by the City Council of Arden Hills, that the City shall ban the parking of motor vehicles on Sandeen Road from its northern intersection with Lake Johanna Boulevard to approximately 160 feet south at all times.

ADOPTED by the Arden Hills City Council this 25th day of January, 2016

_____
David Grant, MAYOR

ATTEST:

_____
Amy Dietl, CITY CLERK

Sandeen Road On-Street Parking Restrictions
January 2016

Attachment B

0 50 100 200 Feet

Map Date: January 15, 2016
P:\GIS_Data\Planning\Projects\Sandeen Road Parking

Proposed section of Sandeen Road where "No Parking" signs would be installed

Attachment C

AGENDA ITEM - 1C

ARDEN HILLS

MEMORANDUM

DATE: December 21, 2015

TO: Honorable Mayor and City Councilmembers
Sue Iverson, Acting City Administrator

FROM: Matthew Bachler, Associate Planner

SUBJECT: Sandeen Road On-Street Parking

Background

City staff recently received a concern from a resident regarding street parking on Sandeen Road. The resident reported that access can be limited due to the street's narrow width when vehicles are parked on both sides of the street. The Public Works Department has also identified this as a concern, especially as it relates to emergency vehicle access and snow removal.

In response to these concerns staff mailed a survey to residents along Sandeen Road in late October. The purpose of the survey was to gather information on residents' current need for street parking on Sandeen Road and whether the neighborhood would support limiting street parking to one side of the street or prohibiting it along both sides. A copy of the survey and cover letter is included in Attachment A.

Survey Results

Staff identified 16 occupied properties that would be impacted by a change to street parking regulations on Sandeen Road (Attachment B). There are two rental properties on Sandeen Road and a survey was sent to the current resident at each property as well as the property owner. A survey was mailed to Presbyterian Homes, operator of the Johanna Shores senior living campus, which has a secondary access driveway on Sandeen Road.

The City received a total of 15 completed surveys. A spreadsheet summarizing the survey responses is included in Attachment C. Two residents along Sandeen Road (3280 Sandeen Road and 3290 Lake Johanna Boulevard) reported not having sufficient off-street parking on their property to accommodate their parking needs or visitors. Both residents indicated that they or their visitors park on Sandeen Road on a daily basis. The remaining respondents reported using street parking occasionally.

Survey respondents were asked their preferences for no change in parking regulations or for limiting parking on one or both sides of the street. The survey results show that four respondents preferred no change, and ten respondents preferred a change to limit parking on one or both sides of the street. Both the resident and owner of 3280 Sandeen Road preferred no changes and that response was counted only once.

Discussion

As a follow-up to the mailed survey, a letter was sent to all residents along Sandeen Road on November 23rd reminding them of the City's existing street parking regulations. Staff has also contacted the Ramsey County Sherriff's Department and requested that they increase patrols in the area and ticket cars that are in violation of the regulations. The following on-street parking requirements are included in Chapter 8 of the City Code and are applicable citywide:

- Winter Parking Regulations. No vehicle shall be parked on the improved portion of any street in the City immediately after the accumulation of two (2) or more inches of snow until snow removal or plowing has been completed.
- Overnight Parking. No vehicle shall be parked on any street between the hours of 2:00 a.m. and 6:00 a.m.
- Parking on Public Streets. Parking on a public street shall not exceed six (6) hours.
- Setback from Intersections. Parking shall be setback a minimum of twenty (20) feet from any intersection without a marked crosswalk. (This rule applies to the two intersections of Sandeen Road with Lake Johanna Boulevard).

Staff believes that many of the parking issues are being generated by the two properties that reported not having sufficient off-street parking. The City may be able to address some of the parking concerns by first communicating with these two property owners. The property at 3280 Sandeen Road is a rental and the current resident reported the household has four vehicles. There is a two-car garage on the property, but only a short driveway from the street that cannot accommodate any parked vehicles. Therefore, this property regularly relies on street parking along Sandeen Road.

The resident at 3290 Lake Johanna Boulevard currently runs a business out of the home. Information on the business was provided on the survey and staff believes it would be considered a Class II Home Occupation, which requires a CUP in the R-2 District. A letter has been sent to the resident requesting that they contact the City regarding the CUP application requirements. The Zoning Code prohibits home businesses from using on-street parking to satisfy the parking requirements for their operation. The resident noted that their clients and two employees park vehicles on Sandeen Road.

In addition to increased patrols by the Ramsey County Sheriff's Department and working with the property owners mentioned above, staff recommends that the City post no parking signs along Sandeen Road near the northern intersection with Lake Johanna Boulevard. There are

significant safety concerns when vehicles are parked along this curve because sight lines for drivers are reduced.

Staff is requesting that the City Council provide direction on the following questions:

1) Does the Council support the staff recommendation to post no parking signs along the curved section of Sandeen Road in proximity to its northern intersection with Lake Johanna Boulevard?

2) Does the Council want to take any additional steps at this time to address street parking on Sandeen Road?

Attachments

A. Resident and Property Owner Survey and Cover Letter
B. Map of Impacted Properties
C. Spreadsheet of Survey Results

Attachment D

Approved:

CITY OF ARDEN HILLS, MINNESOTA
CITY COUNCIL WORK SESSION
DECEMBER 21, 2015
5:00 PM - ARDEN HILLS CITY COUNCIL CHAMBERS

1. AGENDA ITEMS

C. Sandeen Road On-Street Parking

Associate Planner Bachler stated City staff had received concerns regarding on-street parking on Sandeen Road. He said there were also concerns regarding emergency vehicle access in addition to Public Works staff concerns regarding difficulties with snow removal. He indicated 16 properties impacted by the proposed change were provided information regarding current regulations as well as a survey. The survey results indicated most residents occasionally use on-street parking, with two properties showing regular use of on-street parking. He said the City continues to work with Ramsey County to enforce parking regulations.

Associate Planner Bachler stated that City staff recommends posting no parking signs near the northern intersection of Sandeen Road and Lake Johanna Boulevard. He stated the properties located at 3280 Sandeen Road and 3290 Lake Johanna Boulevard reported daily on-street parking and that 3290 Lake Johanna Boulevard operates an in-home business and uses on-street parking for employees and clients. He also said that City staff will communicate directly with these two properties regarding the parking regulations.

Associate Planner Bachler asked for feedback from the City Council.

A discussion ensued regarding clarification of safety issues as they pertain to emergency vehicles on Sandeen Road, the characteristics of this road and the properties thereon, and suggested solutions for parking issues.

Associate Planner Bachler stated staff will work with the Public Works department to post no parking signs along the curve on Sandeen Road, work with the Sheriff's department to step up enforcement, and work closely with the two properties that utilize on-street parking.

Acting Public Works Director Anderson stated it would be helpful to Public Works if the curve on Sandeen Road allowed more space for plowing. He suggested posting no parking signs on both sides of Sandeen Road to the southerly properly line of 3290 Sandeen Road.

Mayor Grant requested that both the Police and Fire departments be consulted regarding the proposed change, and that they concur before any signs are posted.

DRAFT

Community Development Director Hutmacher stated staff will consult with the City Attorney regarding compliance of the property with the home business located at 3290 Lake Johanna Boulevard.

DRAFT

CONSENT ITEM – 6C

ARDEN HILLS

MEMORANDUM

DATE: January 25, 2016

TO: Honorable Mayor and City Councilmembers
Sue Iverson, Acting City Administrator

FROM: Matthew Bachler, Senior Planner

SUBJECT: **Planning Case #15-025**
Applicant: FDH Velocitel (on behalf of AT&T Mobility)
Property Address: 3900 Bethel Drive
Request: Conditional Use Permit Amendment

Requested Action

Motion to approve Planning Case 15-025 for a Conditional Use Permit Amendment at 3900 Bethel Drive, based on the findings of fact and the submitted plans, as amended by the five (5) conditions in the January 25, 2016, Report to the City Council.

Background

The City approved a Conditional Use Permit (CUP) in 2010 to allow AT&T Mobility to install roof-mounted cellular antennas on the Brushaber Commons building on Bethel University's campus and to construct a 160 square foot equipment shed adjacent to the building. AT&T Mobility leases the space for their equipment from Bethel University. The City does not receive any lease payments as part of this agreement.

The existing installation includes six wireless antennas that are housed in two 12-foot tall antenna assembly canisters. The canisters have the appearance of smokestacks and are designed to blend in with the roof-mounted mechanical equipment. AT&T Mobility has requested a CUP Amendment to upgrade the installation in order to improve service capacity for its customers in this area of the City. The upgrade would entail replacing existing antennas with nine new antennas and extending the antenna mounting poles by two feet. The antenna assembly canisters would also be extended by two feet to a new height of 63 feet above ground level. All antennas would continue to be housed in the canisters and entirely concealed.

The applicant has provided a project narrative explaining the upgrade and the need for this work (Attachment B). The complete plan set for the upgrade project is included in Attachment D and photographs showing existing and proposed conditions are included in Attachment E.

Discussion

A full evaluation of the proposal was presented to the Planning Commission at their regular meeting on January 6, 2016. The staff report to the Planning Commission is included in Attachment G. The proposed upgrade project meets the height, location, and screening requirements included in Section 1325.09 of the Zoning Code, which regulates antennas, dish antennas, and towers in the City.

During its review, the Planning Commission encouraged the applicant to provide additional information for the City Council meeting on how the upgrade would improve wireless coverage and capacity. FDH Velocitel has informed staff that the principal purpose of the project is to increase capacity, not expand coverage, and that the following specific items would be addressed:

- Increase bandwidth for consumers and emergency services
- Reduce interference from neighboring sites
- Increase call capacity and reduce block calls during high consumer volumes
- Improve speed of data usage to transmit and receive
- Increase capacity to process data

FDH Velocitel has also provided propagation maps that show how the proposed upgrade would improve capacity and coverage (Attachment F). The improved service would benefit all AT&T customers in this area of the City, including Bethel University.

Conditional Use Permit Review

Section 1355.04 Subd 3 of the Arden Hills Zoning Code lists the criteria for evaluating a Conditional Use Permit. The City Council should consider the effect of the proposed use upon the health, safety, convenience and general welfare of the owners and occupants of the surrounding land, in particular, and the community as a whole, in general, including but not limited to the following factors:

1. Existing and anticipated traffic and parking conditions;
2. Noise, glare, odors, vibration, smoke, dust, air pollution, heat, liquid or solid waste, and other nuisance characteristics;
3. Drainage;
4. Population density;

5. Visual and land use compatibility with uses and structures on surrounding land; adjoining land values;
6. Park dedications where applicable; and the
7. Orderly development of the neighborhood and the City within the general purpose and intent of this ordinance and the Comprehensive Development Plan for the City.

Additional Review

City Attorney
The City Attorney has reviewed this case and advises that the federal government, through the Federal Communications Commission (FCC), has recently adopted rules further limiting the authority of local governments to restrict or deny the expansion of existing antennas or towers. The FCC rule is predicated on their view that once the tower or antenna facilities are sited and in operation, modifications or minor expansions to modernize or expand should not be subjected to as detailed a review as the original siting determination. While the rules are complicated, they basically grant authority for the operator to expand the facilities by the greater of 10% of their original height or twenty feet.

The City Attorney has drafted a CUP Amendment (Attachment A) and noted that both AT&T Mobility, as the lessee and primary applicant, and Bethel University, as the property owner, should be required to sign the document before the issuance of a building permit.

Findings of Fact

The Planning Commission reviewed Planning Case 15-025 at their regular meeting on January 6, 2016. Draft minutes from the meeting are included in Attachment H. The Planning Commission offers the following findings of fact for consideration:

General Findings:
1. The applicant has requested a Conditional Use Permit Amendment in order extend the height of the existing wireless antenna installation at 3900 Bethel Drive, approved in Planning Case 10-010.
2. The property at 3900 Bethel Drive is located in the B-1 - Limited Business District.
3. Cellular towers and antennas are allowed as a conditional accessory use in the B-1 District.
4. The proposed upgrade would increase the number of antennas from six (6) to nine (9).
5. The Zoning Code states that no antenna shall be mounted at a height exceeding 75 feet.
6. The proposed upgrade would increase the height of the antenna assembly canisters that house the antennas to 63 feet above ground level.
7. The antennas would be located approximately 1,185 feet from the nearest property line.
8. The antennas would be concealed inside the antenna assembly canisters, which will be painted to blend in with existing mechanical equipment on the roof.

Conditional Use Permit Evaluation Criteria:

9. The proposed plan would not have any impact on traffic or parking conditions.
10. The proposed plan will not produce any permanent noise, glare, odors, vibration, smoke, dust, air pollution, heat, liquid or solid waste, and other nuisance characteristics.
11. The proposed plan will not impact drainage.
12. The proposed plan will not impact population density.
13. The proposed antenna assembly canisters will likely only be visible from locations on Bethel University's campus and they are not anticipated to have an impact on land use compatibility with uses and structures on surrounding land or adjoining land values.
14. Park dedications are not applicable.
15. The proposed plan does not conflict with the general purpose and intent of the Zoning Code or the Comprehensive Development Plan for the City.

Recommendation

The Planning Commission unanimously recommends approval (6-0) of Planning Case 15-025 for a Conditional Use Permit Amendment at 3900 Bethel Drive, based on the findings of fact and the submitted plans in the January 25, 2016, Report to the City Council, as amended by the following five (5) conditions:

1. The project shall be completed in accordance with the plans submitted as amended by the conditions of approval. Any significant changes to these plans, as determined by the City Planner, shall require review and approval by the Planning Commission and City Council.
2. A building permit shall be obtained for all proposed antennas and associated equipment prior to installation.
3. A final inspection of the existing antenna installation shall be completed by the City Building Official prior to the issuance of a building permit for the new antennas and associated equipment.
4. A Conditional Use Permit drafted by the City Attorney shall be signed by Bethel University prior to the issuance of any building permits.
5. The antenna assembly canisters shall be painted to blend in with the surrounding equipment on the roof to which they are attached.

Options

1. Approve the proposal as submitted.
2. Approve the proposal with conditions (Recommended Action).
3. Deny the application with reasons for denial.
4. Table for additional information.

Notice

Notice was published in the *Arden Hills/Shoreview Bulletin* on December 16, 2015, and notice was prepared by the City and mailed to residents within five hundred (500) feet of the subject property.

Public Comments

At this time the City has not received any comments from the public in support or opposition of the proposal.

Deadline for Agency Action

The City of Arden Hills received the completed application for this request on November 23, 2015. Pursuant to Minnesota State Statute, the City is required to act on this request by January 22, 2016, (60 days), unless the City provides the petitioner with written reasons for an additional 60-day review period.

The applicant was notified on December 22, 2015 of the City's request for an additional 60-day review period. Pursuant to Minnesota State Statute, the City must now act on this request by March 22, 2016 (120 days). The City may, with the consent of the applicant, extend the review period beyond the initial 120 days.

Attachments

A. Conditional Use Permit Amendment
B. Land Use Application and Project Narrative
C. Site Map and Aerial Maps
D. Construction Drawings Plan Set
E. Photographs – Existing and Proposed Conditions
F. Propagation Maps
G. Planning Commission Report, January 6, 2016
H. Draft Planning Commission Minutes, January 6, 2016

Attachment A

(reserved for recording information)

CITY OF ARDEN HILLS
RAMSEY COUNTY, MINNESOTA

CONDITIONAL USE PERMIT AMENDMENT

Case No. 15-025

1. Recitals.

A. Bethel University is a non-profit institution of higher education ("Bethel") which is located in the City of Arden Hills, Ramsey County, Minnesota.

B. On September 27, 2010, Bethel was issued a Conditional Use Permit Amendment (Planning Case No. 10-010) allowing the installation of roof-mounted cellular antennas by AT&T Mobility on the Brushaber Commons building and to construct a 160 square foot equipment shed adjacent to the building in conformity with plans and specifications provided to and approved by Bethel.

C. AT&T Mobility leases the space for its equipment from Bethel University. AT&T Mobility's equipment includes six wireless antennas that are housed in two (2) 12-foot tall antenna assembly canisters that resemble smokestacks and are designed to blend in with the roof-mounted mechanical equipment.

D. AT&T Mobility has requested a Conditional Use Permit Amendment for an upgrade to the installation for the stated purpose to improve service capacity in this area of the City. The upgrade would entail replacing existing antennas with nine (9) new antennas and extending the antenna mounting poles by two (2') feet. The antenna assembly canisters would also be extended by two (2') feet to a new height of 63 feet above ground level. All antennas would continue to be housed and entirely concealed in the canisters.

E. The proposed upgrade project meets the height, location and screening requirements included in Section 1325.09 of the Arden Hills Zoning Code.

F. At a public hearing on the 6th day of January, 2016, the Arden Hills Planning Commission reviewed AT&T Mobility's application, the report and recommendations of the Arden Hills City Planner, the comments made by the public during the public hearing, and recommended approval of the Conditional Use Permit Amendment, subject to certain conditions, to the City Council.

D. On the 25th day of January, 2016, the Arden Hills City Council considered the recommendations of the Planning Commission, the comments made during the public hearing on January 6th, 2016, the effects of the proposed Conditional Use Permit Amendment on the health, safety, convenience, and general welfare of the owners and occupants of the surrounding land, and the community as a whole, and passed a motion approving Planning Case No. 15-025, subject to certain conditions enumerated herein.

2. **Permit.** Subject to the terms and conditions set forth herein, the City of Arden Hills hereby grants a conditional use permit amendment for the following use:

> Upgrade and replace the existing six antennas with nine new antennas and related equipment on the existing building.

3. **Property.** The permit is for the following described property located at 3900 Bethel Drive, in the City of Arden Hills, Ramsey County, Minnesota:

> Those parts of Sections 21, 22, 27 and 28, Township 30, Range 23, lying Westerly and Southerly of the westerly and southerly right-of-way lines of State Trunk Highway No. 51 and Interstate Highway 694 lying northerly of the northerly right-of-way line of the Canadian Pacific Railroad Company and lying northerly and easterly of the northerly and easterly right-of-way lines of State Trunk Highway No. 10, except the South ¼ of the Southeast ¼ of the Southeast ¼ of the Section 21, Township 30, Range 23, lying east of the easterly line of Highway No. 10, according to the U.S. Government Survey thereof (herein the "Subject Property").

4. **Conditions.** The permit is issued subject to full compliance by AT&T Mobility and Bethel, or their successors, of the following conditions:

> a. The project shall be completed in accordance with the plans submitted as amended by the conditions of approval. Any significant changes to these plans, as determined by the City Planner, shall require review and approval by the Planning Commission and City Council.

b. The antennas and equipment shall conform to Section 1325.09 of the Arden Hills Zoning Code.

c. A building permit shall be obtained for all proposed antennas and associated equipment prior to installation.

d. A final inspection of the existing antenna installation shall be completed by the City Building Official prior to the issuance of a building permit for the new antennas and associated equipment.

e. The antenna assembly canisters shall be painted to blend in with the surrounding equipment on the roof to which they are attached.

f. This Conditional Use Permit Amendment shall be signed by the applicant and the property owner prior to the issuance of any building permits.

5. **Termination of Permit.** The City may revoke the permit following a public hearing for violation of the terms of this permit.

6. **Lapse.** If within one year of the issuance of this permit the allowed use has not been completed or the use commenced, this permit shall lapse.

7. **Criminal Penalty, other Enforcement.** Both the owner and lessee of the subject property are responsible for compliance with this conditional use permit. Violation of the terms of this conditional use permit is a criminal misdemeanor.

Remainder of page intentionally left blank.
Signatures contained on following pages.

Dated: January 25, 2016.

CITY OF ARDEN HILLS

By: _____
David Grant, Mayor

(SEAL)

And _____
Amy Dietl, City Clerk

STATE OF MINNESOTA)
(ss.
COUNTY OF RAMSEY)

The foregoing instrument was acknowledged before me this _____ day of _____, 2016, by **David Grant** and by **Amy Dietl**, respectively the Mayor and City Clerk of the **City of Arden Hills**, a Minnesota municipal corporation, on behalf of the corporation and pursuant to the authority granted by its City Council.

_____
Notary Public

Dated: _____, 2016.

NEW CINGULAR WIRELESS PCS, LLC
A Delaware Limited Liability Company

By, **AT&T Mobility Corporation**
Its Manager

By: _____
_____ [print name]
Its: _____

STATE OF MINNESOTA)
(ss.
COUNTY OF_____)

The foregoing instrument was acknowledged before me this _____ day of _____, 2016, by _____ the _____ of **AT&T Mobility Corporation**, the Manager of **New Cingular Wireless PCS, LLC,** a Delaware limited liability company, on behalf of the limited liability company.

_____
Notary Public

Dated: _____, 2016.

BETHEL UNIVERSITY
A Minnesota Non-profit Corporation

By: _____
_____ [print name]
Its: _____

STATE OF MINNESOTA)
(ss.
COUNTY OF RAMSEY)

The foregoing instrument was acknowledged before me this ____ day of _____, 2016, by _____ , the _____of **Bethel University**, a Minnesota non-profit corporation, on behalf of Bethel and pursuant to the authority granted by Bethel.

_____
Notary Public

DRAFTED BY:
CAMPBELL KNUTSON
Professional Association
Grand Oak Office Center I
860 Blue Gentian Road, Suite 290
Eagan, Minnesota 55121
Telephone: (651) 452-5000
JJJ

Attachment B

ARDEN HILLS

1245 West Highway 96
Arden Hills, Minnesota 55112
Telephone (651) 792-7800
Fax (651) 634-5137
www.cityofardenhills.org

For Office Use Only	
Planning Case No.	15-025
Submittal Date	11/23/15
Application Completed Date	
Accepted by	MWB
Receipt Number	#864067, #864068
Council Decision	
Council Decision Date	

2015 LAND USE APPLICATION

Applicant Information

Applicant: FDH Velocitel on behalf of their client AT&T Mobility (LTE 2C/3C/ Shoreview/ FA: 10116081)

Address: 1701 American Blvd East Bloomington Minnesota 55425

Telephone No.: 952.944.1858 x 188 Other:

Fax No.: 952.944.1506

Email Address: Mark.Hennek@FDHVelocitel.com

Property Information

Property Owner: Bethel University

Owner Address: 3900 Bethel Drive St. Paul Minnesota 55112

Owner Telephone No. 651.638.6290 Office Other: 651.368.1539- Cell

Address of Property Involved: 3900 Bethel Drive Arden Hills Minnesota 55112

Legal Description: SW 1/4 N of railroad and NW 1/4 of Section 27, Township 30 Range 23 Ramsey County MN, Parcel I

Property ID No.: 273023240002

Type of Use: Colleges-Private

Zone: B-1 Limited Business District Property Acreage: 191.32 Acres

Type of Request

- ☐ Comprehensive Plan Amendment ($893 + $1,050 escrow)
- ☒ Conditional Use Permit or Amendment ($630; $315 for Home Occupation or if no Site Plan Review is required + $630 escrow)
- ☐ Interim Use Permit or Amendment ($630; $315 if no Site Plan Review is required + $735 escrow)
- ☐ Preliminary Plat ($630 + $26 per lot + $1,575 escrow)
- ☐ Final Plat ($525 + $26 per lot)
- ☐ Concept Planned Unit Development ($315)
- ☐ Master Planned Unit Development ($630 + $2,100 escrow)
- ☐ Final Planned Unit Development ($315 + $630 escrow)
- ☐ Planned Unit Development Amendment ($630; $315 if no Site Plan Review is required + $2,100 escrow)
- ☐ Site Plan Review ($315 + $630 escrow)
- ☐ Rezoning ($630 + $1,050 escrow)
- ☐ Zoning or City Code Amendment ($630 + $1,050 escrow)
- ☐ Minor Subdivision (lot split/consolidation) ($473 + $1,050 escrow)
- ☐ Variance (Zoning Code) ($315 + $630 escrow)
- ☐ Vacation of Easement or Right-of-Way ($420 + $630 escrow)
- ☐ Appeal of Administrative Decision ($105)
- ☐ Land Use Requests – Not Already Specified ($210)

Revised: 12-17-14

Brief Description of Request (please also include a typed, detailed letter explaining the project):

Remove all existing antenna and install (9) antenna to the existing stealth cupola structure. The stealth canisters will
need to be modified/extended 2' to accommodate the proposed stacking and positioning of the antenna on the mast
pipe. The associated equipment and RRH will be placed within the existing cupola and within the existing
shelter along with (6) additional 1 1/4" coax as represented in the construction drawings and passing structural
provided.

IMPORTANT

- Certain applications are subject to review and approval by the Rice Creek Watershed District. Contact RCWD directly at 763-398-3070 for additional information.
- The land use application fees do not cover building, sign, or other permit fees that may be required upon approval of a land use application.
- All applications will be subject to additional fees for reimbursement of consultant costs associated with filing, reviewing, and processing of application in the form of an escrow to the City.

Filing & Information Requirements

The City requests that you make a pre-application meeting with the City Planner to discuss the application process, requirements, and deadlines. Unless waived by the City Planner or Planning Commission, a certified survey of the property is required for all applications. A checklist with additional application requirements can be found at www.cityofardenhills.org/landuseapplications.

Complete/Incomplete Applications

An incomplete application will delay the processing of land use requests. The application approval time commences and an application is considered officially filed when the City Planner has received and examined the application and determined that the application is complete. A decision on whether the application is complete or incomplete shall be made within fifteen (15) working days following the submittal of the application. When the application is deemed to be "complete" it shall be placed on the agenda of the first possible Planning Commission meeting provided that all required public notices have been sent and published.

Payment of Fees

The undersigned acknowledges that she/he understands that before a land use application can be deemed complete, all required information and fees (including all deposits) must be paid to the City. If additional fees are required to cover costs incurred by the City, the City Planner has the right to require additional payment from one or more of the undersigned, who shall be jointly liable for such fees. Such expenses may include (but are not limited to) direct city payroll and overhead costs, fees paid to consultants and other professionals, and the cost of printing, mailing, and supplies. The City may withhold final action on a land use application, withhold building permits, and/or rescind prior action until all miscellaneous fees have been paid. Applicants are advised that an escrow deposit is required at the time of the submittal of the land use application to offset costs associated with the proposed project. Unused portions of an escrow are returned to the applicant upon successful implementation of an approved plan.

Notice of Meeting Attendance

In order for the Planning Commission and the City Council to consider any application, the applicant or a designated representative must be present at the scheduled meeting. If not, the matter may be tabled until the next available agenda.

Agenda Deadline and Meeting Schedule

The deadline for submittal of land use applications is required according to the schedule outlined below. There are **no exceptions.** Failure to submit all application materials by the deadline date may delay the review process. Planning Commission meetings are typically held on the first Wednesday after the first Monday of each month at 6:30 PM, though please contact City Hall to verify the meeting date and time. City Council meetings are held typically the last Monday of the same month at 7:00 PM. Meetings are held in the Council Chambers at the City of Arden Hills, 1245 West Highway 96, Arden Hills, Minnesota 55112, unless otherwise stated. Applicants are advised that additional meetings and/or workshops are scheduled when necessary upon approval of the Planning Commission.

2015 SCHEDULE *(*subject to change)*

APPLICATION DEADLINE DATE*	TENTATIVE PLANNING COMMISSION MEETING DATE* (Generally held on the first Wednesday after the first Monday at 6:30 p.m.)	TENTATIVE CITY COUNCIL MEETING DATE* (Generally held on the last Monday at 7:00 p.m.)
December 1 (2014)	January 7	January 26
January 5	February 4	February 23
February 2	March 4	March 30
March 2	April 8	April 27
April 6	May 6	May 25
May 4	June 3	June 29
June 1	July 8	July 27
July 6	August 5	August 31
August 3	September 9	September 28
September 7	October 7	October 26
October 5	November 4	November 30
November 2	December 9	December 28
December 7	January 6 (2016)	January 25 (2016)

Acknowledgement and Signature

I acknowledge that I have read all of the information listed in the City of Arden Hills Land Use Application and fully understand that I am responsible for all costs incurred by the City related to the processing of this application.

Property Owner Signature (Required) — Date: 11.23.15

Applicant Signature (If different than the property owner) — Date: 11.23.15

Please contact the City Planner at 651-792-7800
if you have any questions regarding this application.

Additional copies of this application form are available on the City's website: www.cityofardenhills.org/landuseapplications

Revised: 12-17-14

BETHEL
UNIVERSITY

DOUG GABRIELSEN
Manager Of Energy & Technical Services
Facilities Management
office 651.638.6290
douglas-gabrielsen@bethel.edu

October 23, 2015

To Whom It May Concern,

This is to inform you that Bethel University is aware of the AT&T antennae upgrade project on the roof of the Brushaber Commons building on our campus at 3900 Bethel Drive, Arden Hills, MN. We will be reviewing the completed proposed drawings before construction can begin.

Thank you,

Doug Gabrielsen

1701 American Blvd E
Suite 16
Bloomington, MN 55425

Project Narrative

November 11, 2015

Attn: Matthew Bachler
Associate Planner
City of Arden Hills
1245 West Highway 96
Arden Hills, MN 55112

RE: FA No.10116081/ Site No. MNL01417 Site Name: Shoreview / Project: LTE 2C-3C

Dear Mr. Bachler and to whom this concerns,

This letter is to inform you that New Cingular Wireless PCS, LLC (d.b.a., AT&T Mobility) is in the process of making enhancements to its wireless communications facility at 3900 Bethel Drive Arden Hills, Minnesota 55112. As requested by the City of Arden Hills a summary of the proposed build is necessary to obtain zoning and permitting approval by the City.

AT&T is proposing to remove the existing antenna that are located under a stealth (12') twelve foot fiberglass canister, as represented in the Rev B Construction Drawings dated 11-05-15 and the Photo Sims dated 11-05-15. New Cingular Wireless PCS LLC will be installing (9) SBNHH-1D65A antenna to replace the existing Kathrein 80010764, as to obtain the necessary capacity and coverage that is demanded by the consumer. The proposed associated equipment will be mounted inside the cupola and inside the shelter as represented in the Structural dated 11-04-15.

In order to mount the (9) SBNHH-1D65A antenna the mast pipe will need to be extended (2') two feet as to allow for proper positioning to reduce interference, accurate clearance and suitable cable connection. The SBNHH-1D65A is 55.6" or 4' 7 ½" antenna, which will be positioned in a stacked configuration, as represented in the construction drawings provided. There is a (1') one foot separation needed between the cupola, as well between stacked antennas to reduce interference. The (1') one foot separation will allow for the bending of the cable distribution to obtain proper cable port connections from the antenna to the associated equipment within the cupola. Due to the separation, the antenna positioning/placement within (lower antenna centerline (CL) is 52' and the upper antenna centerline is 59') the stealth smoke stake the canisters will need to be extended (2') two feet to meet the necessary distance needed to stack the antenna and allow for complete functionality of the system, rather than adding additional canisters or expanding the site further.

In conclusion the mast pipe and the canisters will need to be extended by 2' as to allow for the complete functionality of the cell site to obtain the coverage demands by the market and their consumers. We very much appreciate your assistance in the continuing operation of this wireless communication facility. Thank you for your attention to this matter and if you require further information or if you have any questions, please feel free to contact me at 952.944.1858 x 188 or at Mark.Hennek@FDHVelocitel.com

Sincerely,
Mark Hennek
Velocitel, Inc. on behalf of AT&T
1701 American Blvd East
Bloomington, MN 55425

MapRamsey

3900 Bethel Drive

Attachment C

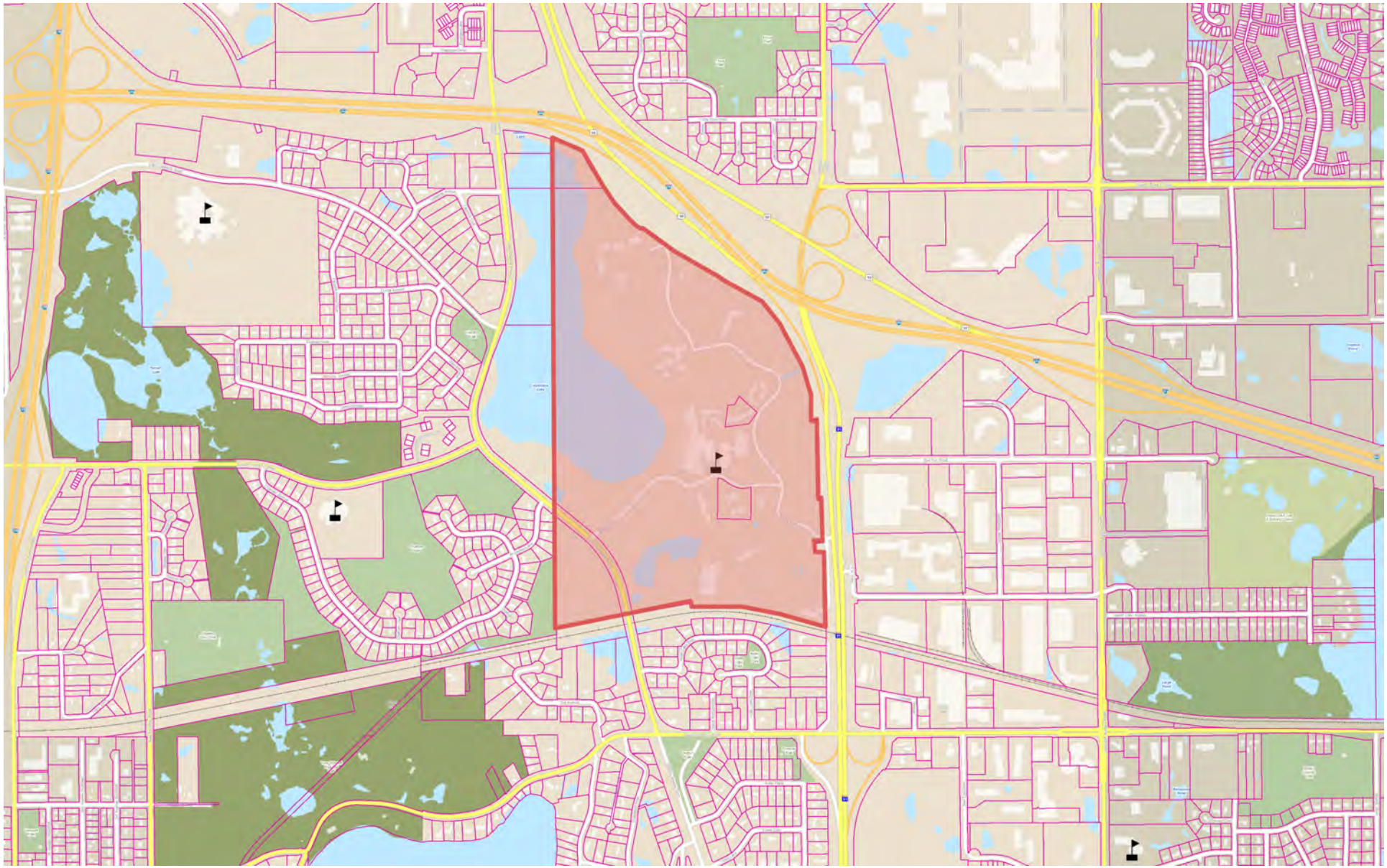

2,666.7 0 1,333.33 2,666.7 Feet

NAD_1983_HARN_Adj_MN_Ramsey_Feet

© Ramsey County Enterprise GIS

This map is a user generated static output from an Internet mapping site and is for reference only. Data layers that appear on this map may or may not be accurate, current, or otherwise reliable.

THIS MAP IS NOT TO BE USED FOR NAVIGATION

1: 16,000

Planning Case 15-025 - 3900 Bethel Drive

Map Date: December 4, 2015
P:\GIS_Data\Planning\Planning Cases\2015\PC 15-025

Property Boundary

Planning Case 15-025 - 3900 Bethel Drive

Map Date: December 15, 2015
P:\GIS_Data\Planning\Planning Cases\2015\PC 15-025

Attachment D

Antenna System Upgrade Project

- LTE 2ND/3RD CARRIER ADD
- SWAP/INSTALL ANTENNAS
- RELOCATE/ADD RRH'S
- IMPROVE QUALITY OF SERVICE

at&t MOBILITY

AT&T MOBILITY
SITE NUMBER: MNL01417
SITE NAME: SHOREVIEW - FA# 10116081
TOWER OWNER: BETHEL UNIVERSITY

SHEET	DRAWING INDEX	REV	DATE
T1	TITLE SHEET	B	11/05/15
C1	GENERAL NOTES	B	11/05/15
C2	SITE PLAN	B	11/05/15
C2.1	EQUIPMENT LAYOUT PLAN	B	11/05/15
C3	ELEVATION VIEW & RF DETAILS	B	11/05/15
C3.1	ANTENNA & CABLE CONFIGURATION	B	11/05/15
C3.2	PLUMBING DIAGRAM	B	11/05/15
C4	ANTENNA DETAILS	B	11/05/15
E1	GROUNDING & RF NOTES	B	11/05/15
E2	GROUNDING DETAILS	B	11/05/15
E2.1	GROUNDING DETAILS	B	11/05/15
E3	GROUNDING & ELECTRICAL DETAILS	B	11/05/15

DIRECTIONS:

START OUT GOING NORTHEAST ON MARQUETTE AVE TOWARD S 9TH ST.
TURN RIGHT ONTO S 4TH ST. TURN SLIGHT LEFT ONTO WASHINGTON AVE SE.
MERGE ONTO I-35W N VIA THE RAMP ON THE LEFT.
KEEP LEFT TO TAKE I-35W N. MERGE ONTO I-694 E VIA EXIT 27A.
TAKE THE MN-51 EXIT, EXIT 42B, TOWARD SNELLING AVE.
MERGE ONTO HAMLINE AVE N/MN-51/COUNTY HWY-50 VIA EXIT 42A TOWARD SNELLING AVE. TAKE THE 1ST RIGHT ONTO BETHEL DR.
3900 BETHEL DR IS ON THE LEFT.

VICINITY MAP

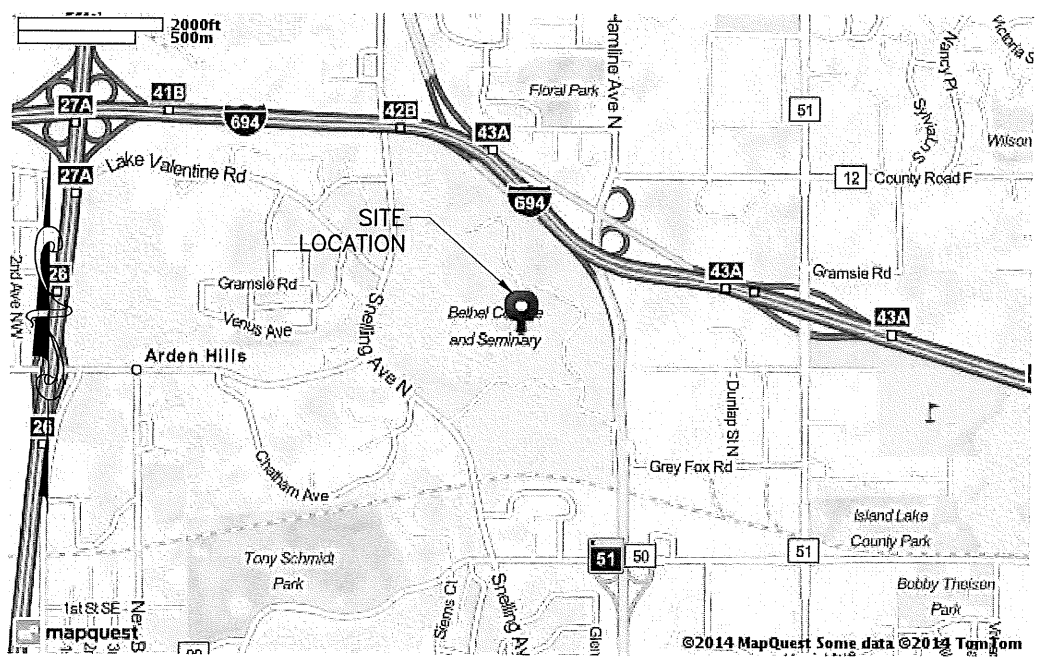

NOT TO SCALE

SCOPE OF WORK: SWAP ALL (6) EXISTING ANTENNAS. THE RELOCATION OF (3) EXISTING RRH'S. REMOVAL (6) LTE DIPLEXERS. THE INSTALLATION OF (9) LTE/UMTS/GSM ANTENNAS, (6) RRHs, AND (1) DC CABLE ON EXISTING ROOFTOP.

SITE ADDRESS: 3900 BETHEL DRIVE
ARDEN HILLS, MN 55112

OWNER: BETHEL UNIVERSITY
3900 BETHEL DRIVE
ARDEN HILLS, MN 55112

APPLICANT: AT&T MOBILITY
901 MARQUETTE AVE.
3RD FLOOR
MINNEAPOLIS, MN 55402

LATITUDE (NAD 83): 45.0588°
LONGITUDE (NAD 83): -93.1623°

CURRENT USE: TELECOMMUNICATIONS FACILITY

PROPOSED USE: TELECOMMUNICATIONS FACILITY

JURISDICTION: CITY OF ARDEN HILLS

COUNTY: RAMSEY

SITE QUALIFICATION PARTICIPANTS

	NAME	COMPANY	NUMBER
A/E	MARK ZAGAME	VELOCITEL	(770) 645-5900
SAC	MARK HENNEK	VELOCITEL	(952) 944-1858
CM	JUSTIN VICK	VELOCITEL	(651) 260-9196
PM	TOM HAMLIN	AT&T	(218) 454-0511

REVIEWED BY:

AT&T OPERATIONS DATE

VELOCITEL DATE

APPROVED BY:

OWNER DATE

JURISDICTION DATE

PRELIMINARY NOT FOR CONSTRUCTION

IT IS A VIOLATION OF LAW FOR ANY PERSON UNLESS THEY ARE ACTING UNDER THE DIRECTION OF A LICENSED PROFESSIONAL ENGINEER TO ALTER THIS DOCUMENT, UNLESS EXPLICITLY AGREED TO BY THE ENGINEER IN WRITING, THE ENGINEER DISCLAIMS ALL LIABILITY ASSOCIATED WITH THE REUSE, ALTERATION OR MODIFICATION OF THE CONTENTS HEREIN.

velocitel® complete wireless solutions
1701 AMERICAN BLVD EAST
SUITE #16
BLOOMINGTON, MN 55425
952-944-1858 (MAIN)
952-944-1506 (FAX)

at&t MOBILITY
901 MARQUETTE AVE.
3RD FLOOR
MINNEAPOLIS, MN 55402

MNL01417
SHOREVIEW
FA# 10116081
3900 BETHEL DRIVE
ARDEN HILLS, MN 55112

NO	DATE	REVISIONS	BY	CHK	APP'D
B	11/05/15	REVISED PER COMMENTS	YS	MZ	–
A	10/05/15	ISSUED FOR REVIEW	YS	MZ	–

SCALE: DESIGNED: CHECKED:

TITLE SHEET

FA #	DRAWING NUMBER	REV
10116081	T1	B

GENERAL NOTES:

1. THE PROPOSED FACILITY WILL BE UNMANNED AND DOES NOT REQUIRE POTABLE WATER OR SEWER SERVICE AND IS NOT FOR HUMAN HABITAT. (NO HANDICAP ACCESS IS REQUIRED).
2. OCCUPANCY IS LIMITED TO PERIODIC MAINTENANCE AND INSPECTION, APPROXIMATELY 2 TIMES PER MONTH, BY at&t TECHNICIANS.
3. NO NOISE, SMOKE, DUST, ODOR OR VIBRATIONS WILL RESULT FROM THIS PROPOSAL.
4. OUTDOOR STORAGE AND SOLID WASTE CONTAINERS ARE NOT PROPOSED.
5. ALL MATERIAL SHALL BE FURNISHED AND WORK SHALL BE PERFORMED IN ACCORDANCE WITH THE at&t SYSTEM GROUNDING STANDARD DATED JUNE 2011 TECHNICAL SPECIFICATION FOR CONSTRUCTION OF GSM/GPRS WIRELESS SITES, "TECHNICAL SPECIFICATION FOR FACILITY GROUNDING". IN CASE OF A CONFLICT BETWEEN THE CONSTRUCTION SPECIFICATION AND THE DRAWINGS, THE DRAWINGS SHALL GOVERN.
6. SUBCONTRACTOR SHALL BE RESPONSIBLE FOR REPAIRING ANY DAMAGE CAUSED BY THE CONSTRUCTION OPERATION.
7. SUBCONTRACTOR SHALL BE RESPONSIBLE FOR OBTAINING ALL PERMITS AND INSPECTIONS REQUIRED FOR CONSTRUCTION.
8. SUBCONTRACTOR SHALL REMOVE ALL TRASH AND DEBRIS FROM THE SITE ON A DAILY BASIS.
9. INFORMATION SHOWN ON THESE DRAWINGS WAS OBTAINED FROM SITE VISITS AND DRAWINGS PROVIDED BY THE SITE OWNER. SUBCONTRACTOR SHALL NOTIFY at&t OF ANY DISCREPANCIES PRIOR TO ORDERING MATERIAL OR PROCEEDING WITH CONSTRUCTION.
10. NO WHITE STROBIC LIGHTS ARE PERMITTED. LIGHTING, IF REQUIRED, WILL MEET FAA STANDARDS AND REQUIREMENTS.
11. ALL SIGNS SHALL BE FURNISHED AND INSTALLED AT ALL at&t WIRELESS SERVICES SITES IN ACCORDANCE WITH SPECIFICATION at&t SYSTEM GROUNDING DATED JUNE 2011.
12. NO ADDITIONAL PARKING TO BE PROPOSED. EXISTING ACCESS AND PARKING TO BE USED.
13. NO LANDSCAPING IS PROPOSED AT THIS SITE.
14.

TYPICAL MINIMUM BEND RADII		
COAX DIAMETER	ANDREW	COMMSCOPE
1/2" SUPERFLEX	1.25"	1.25"
1/2"	5"	2"
7/8"	10"	5"
1 1/4"	15"	8"
1 5/8"	20"	15"

15. ALL COAXIAL CABLE INSTALLATIONS TO FOLLOW MANUFACTURER'S INSTRUCTIONS.

GENERAL NOTES:

1. FOR THE PURPOSE OF CONSTRUCTION DRAWINGS, THE FOLLOWING DEFINITIONS SHALL APPLY:
   CONTRACTOR – CONTRACTOR
   SUBCONTRACTOR – GENERAL CONTRACTOR (CONSTRUCTION)
   OWNER – at&t WIRELESS
2. ALL SITE WORK SHALL BE COMPLETED AS INDICATED ON THE DRAWINGS AND PROJECT SPECIFICATIONS.
3. DRAWINGS PROVIDED HERE ARE NOT TO BE SCALED AND ARE INTENDED TO SHOW OUTLINE ONLY.
4. ALL MATERIALS FURNISHED AND INSTALLED SHALL BE IN STRICT ACCORDANCE WITH ALL APPLICABLE CODES, REGULATIONS, AND ORDINANCES. SUBCONTRACTOR SHALL ISSUE ALL APPROPRIATE NOTICES AND COMPLY WITH ALL LAWS, ORDINANCES, RULES, REGULATIONS, AND LAWFUL ORDERS OF ANY PUBLIC AUTHORITY REGARDING THE PERFORMANCE OF THE WORK.
5. ALL WORK CARRIED OUT SHALL COMPLY WITH ALL APPLICABLE MUNICIPAL AND UTILITY COMPANY SPECIFICATIONS AND LOCAL JURISDICTIONAL CODES, ORDINANCES AND APPLICABLE REGULATIONS.
6. UNLESS NOTED OTHERWISE, THE WORK SHALL INCLUDE FURNISHING MATERIALS, EQUIPMENT, APPURTENANCES, AND LABOR NECESSARY TO COMPLETE ALL INSTALLATIONS AS INDICATED ON THE DRAWINGS.
7. THE SUBCONTRACTOR SHALL INSTALL ALL EQUIPMENT AND MATERIALS IN ACCORDANCE WITH MANUFACTURER'S RECOMMENDATIONS UNLESS SPECIFICALLY STATED OTHERWISE.
8. IF THE SPECIFIED EQUIPMENT CANNOT BE INSTALLED AS SHOWN ON THESE DRAWINGS, THE SUBCONTRACTOR SHALL PROPOSE AN ALTERNATIVE INSTALLATION SPACE FOR APPROVAL BY THE CONTRACTOR AND SITE OWNER.
9. THE SUBCONTRACTOR SHALL PROTECT EXISTING IMPROVEMENTS, PAVEMENTS, CURBS, LANDSCAPING AND STRUCTURES. ANY DAMAGED PART SHALL BE REPAIRED AT SUBCONTRACTOR'S EXPENSE TO THE SATISFACTION OF OWNER.
10. THE SUBCONTRACTOR SHALL CONTACT UTILITY LOCATING SERVICES PRIOR TO THE START OF CONSTRUCTION.
11. ALL EXISTING ACTIVE SEWER, WATER, GAS, ELECTRIC, AND OTHER UTILITIES WHERE ENCOUNTERED IN THE WORK, SHALL BE PROTECTED AT ALL TIMES, AND WHERE REQUIRED FOR THE PROPER EXECUTION OF THE WORK, SHALL BE RELOCATED AS DIRECTED BY ENGINEERS. EXTREME CAUTION SHOULD BE USED BY THE SUBCONTRACTOR WHEN EXCAVATING OR DRILLING PIERS AROUND OR NEAR UTILITIES. SUBCONTRACTOR SHALL PROVIDE SAFETY TRAINING FOR THE WORKING CREW. THIS WILL INCLUDE BUT NOT BE LIMITED TO A) FALL PROTECTION, B) CONFINED SPACE, C) ELECTRICAL SAFETY & D) TRENCHING & EXCAVATION.
12. ALL EXISTING INACTIVE SEWER, WATER, GAS, ELECTRIC AND OTHER UTILITIES, WHICH INTERFERE WITH THE EXECUTION OF THE WORK, SHALL BE REMOVED AND/OR CAPPED, PLUGGED OR OTHERWISE DISCONTINUED AT POINTS WHICH WILL NOT INTERFERE WITH THE EXECUTION OF THE WORK, AS DIRECTED BY THE RESPONSIBLE ENGINEER, AND SUBJECT TO THE APPROVAL OF THE OWNER AND/OR LOCAL UTILITIES.
13. THE AREAS OF THE OWNER'S PROPERTY DISTURBED BY THE WORK AND NOT COVERED BY THE TOWER, EQUIPMENT OR DRIVEWAY, SHALL BE GRADED TO A UNIFORM SLOPE, AND STABILIZED TO PREVENT EROSION.
14. SUBCONTRACTOR SHALL MINIMIZE DISTURBANCE TO EXISTING SITE DURING CONSTRUCTION. EROSION CONTROL MEASURES, IF REQUIRED DURING CONSTRUCTION, SHALL BE IN CONFORMANCE WITH THE LOCAL GUIDELINES FOR EROSION AND SEDIMENT CONTROL.
15. NO FILL OR EMBANKMENT MATERIAL SHALL BE PLACED ON FROZEN GROUND. FROZEN MATERIALS, SNOW OR ICE SHALL NOT BE PLACED IN ANY FILL OR EMBANKMENT.
16. THE SUB GRADE SHALL BE COMPACTED AND BROUGHT TO A SMOOTH UNIFORM GRADE PRIOR TO FINISHED SURFACE APPLICATION.
17. THE SITE SHALL BE GRADED TO CAUSE SURFACE WATER TO FLOW AWAY FROM THE BTS EQUIPMENT.
18. IF NECESSARY, RUBBISH, STUMPS, DEBRIS, STICKS, STONES AND OTHER REFUSE SHALL BE REMOVED FROM THE SITE AND DISPOSED OF LEGALLY.
19. THE SUBCONTRACTOR SHALL PROVIDE SITE SIGNAGE IN ACCORDANCE WITH OSHA REGULATIONS.
20. SUBCONTRACTOR SHALL LEAVE PREMISES IN A CLEAN CONDITION.

STRUCTURAL STEEL NOTES:

1. ALL STEEL WORK SHALL BE PAINTED IN ACCORDANCE WITH THE PROJECT SPECIFICATIONS AND IN ACCORDANCE WITH ASTM A36 UNLESS OTHERWISE NOTED.
2. ALL WELDING SHALL BE PERFORMED USING E70XX ELECTRODES AND WELDING SHALL CONFORM TO AISC AND AWS D1.1. WHERE FILLET WELD SIZES ARE NOT SHOWN, PROVIDE THE MINIMUM SIZE PER TABLE J2.4 IN THE AISC "MANUAL OF STEEL CONSTRUCTION". PAINTED SURFACES SHALL BE TOUCHED UP.
3. BOLTED CONNECTIONS SHALL BE ASTM A325 BEARING TYPE (3/4"ø) CONNECTIONS AND SHALL HAVE MINIMUM OF TWO BOLTS UNLESS NOTED OTHERWISE.
4. NON–STRUCTURAL CONNECTIONS FOR STEEL GRATING MAY USE 5/8" DIA. ASTM A 307 BOLTS UNLESS NOTED OTHERWISE.
5. INSTALLATION OF CONCRETE EXPANSION/WEDGE ANCHOR, SHALL BE PER MANUFACTURER'S WRITTEN RECOMMENDED PROCEDURE. THE ANCHOR BOLT, DOWEL OR ROD SHALL CONFORM TO MANUFACTURER'S RECOMMENDATION FOR EMBEDMENT DEPTH OR AS SHOWN ON THE DRAWINGS. NO REBAR SHALL BE CUT WITHOUT PRIOR ENGINEERING APPROVAL WHEN DRILLING HOLES IN CONCRETE. SPECIAL INSPECTIONS, REQUIRED BY GOVERNING CODES, SHALL BE PERFORMED IN ORDER TO MAINTAIN MANUFACTURER'S MAXIMUM ALLOWABLE LOADS.
6. ALL METAL WORK SHALL BE GALVANIZED IN ACCORDANCE WITH SPECIFICATION ASTM A123. ALL SHOP WELDED MEMBERS SHALL BE GALVANIZED AFTER WELDING.

PRELIMINARY NOT FOR CONSTRUCTION

IT IS A VIOLATION OF LAW FOR ANY PERSON UNLESS THEY ARE ACTING UNDER THE DIRECTION OF A LICENSED PROFESSIONAL ENGINEER TO ALTER THIS DOCUMENT. UNLESS EXPLICITLY AGREED TO BY THE ENGINEER IN WRITING, THE ENGINEER DISCLAIMS ALL LIABILITY ASSOCIATED WITH THE REUSE, ALTERATION OR MODIFICATION OF THE CONTENTS HEREIN.

velocitel®
complete wireless solutions
1701 AMERICAN BLVD EAST
SUITE #16
BLOOMINGTON, MN 55425
952-944-1858 (MAIN)
952-944-1506 (FAX)

at&t MOBILITY
901 MARQUETTE AVE.
3RD FLOOR
MINNEAPOLIS, MN 55402

MNL01417
SHOREVIEW
FA# 10116081
3900 BETHEL DRIVE
ARDEN HILLS, MN 55112

NO.	DATE	REVISIONS	BY	CHK	APP'D
B	11/05/15	REVISED PER COMMENTS	YS	MZ	–
A	10/05/15	ISSUED FOR REVIEW	YS	MZ	–

SCALE: DESIGNED: CHECKED:

GENERAL NOTES

FA #	DRAWING NUMBER	REV
10116081	C1	B

NOTES:

THIS SITE HAS NO EXISTING WATER/SEWER LINES OR ON SITE SEWAGE FACILITIES

LIMITS OF DISTURBANCE FOR THIS PROJECT ARE = 0

BUILDING COVERAGE CALCULATIONS: NO CHANGE

IMPERVIOUS COVERAGE CALCULATIONS: NO CHANGE

PROPOSED STRUCTURAL ADDITIONS: NONE

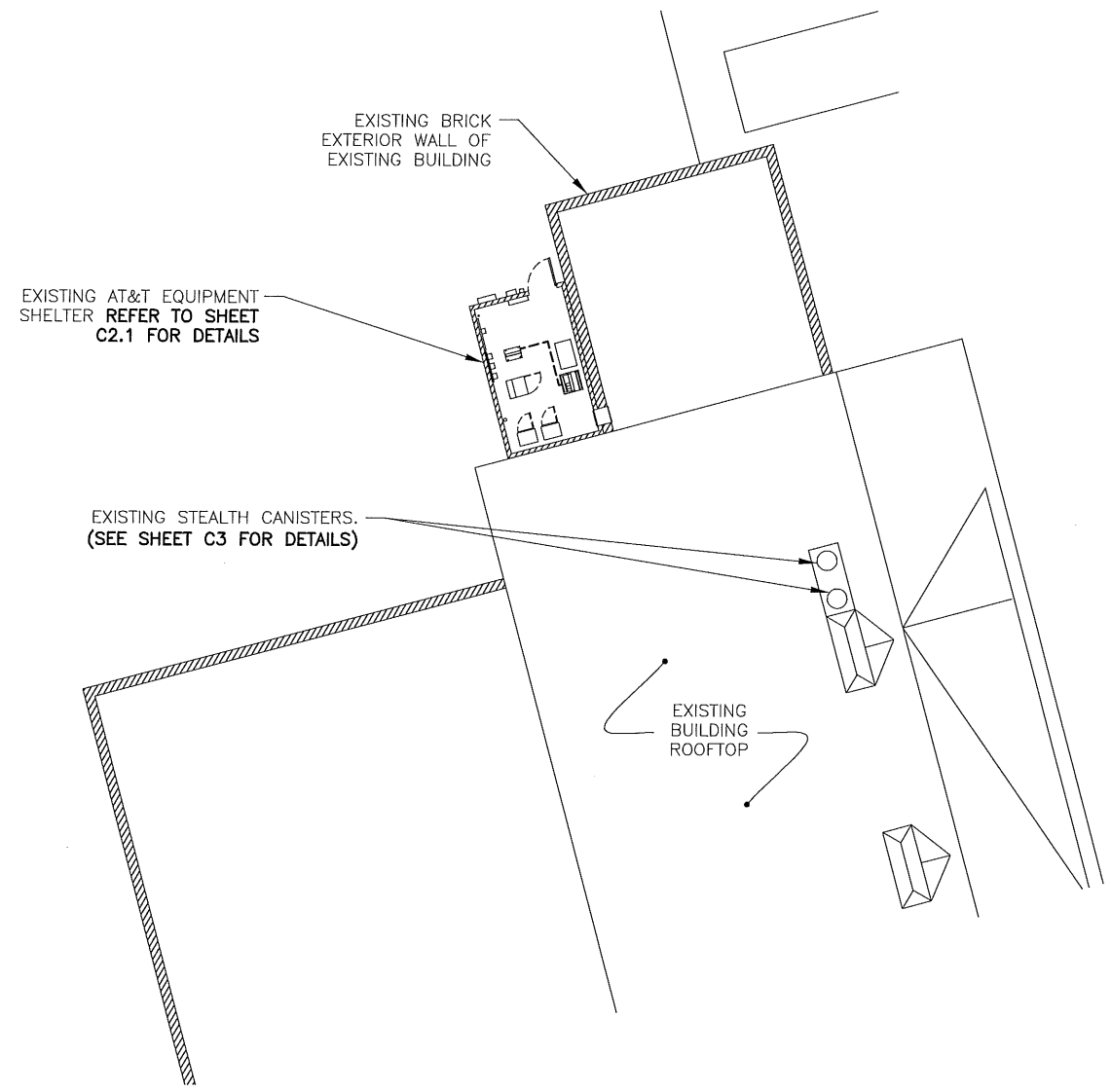

CALLED NORTH

SYMBOLS AND MATERIALS

D / SH — DETAIL REFERENCE

SECTIONS AND DETAILS

CONCRETE

EARTH

GRAVEL/STONE

SITE LEGEND

PROPERTY LINE

FENCE LINE

PP — PDU POWER CABLE

BT — BIAS "T" CABLE

PA — PDU ALARM CABLE

SITE PLAN

SCALE: 1"=20'

1

1"=20' 20 0 20

PRELIMINARY NOT FOR CONSTRUCTION

IT IS A VIOLATION OF LAW FOR ANY PERSON UNLESS THEY ARE ACTING UNDER THE DIRECTION OF A LICENSED PROFESSIONAL ENGINEER TO ALTER THIS DOCUMENT. UNLESS EXPLICITLY AGREED TO BY THE ENGINEER IN WRITING, THE ENGINEER DISCLAIMS ALL LIABILITY ASSOCIATED WITH THE REUSE, ALTERATION OR MODIFICATION OF THE CONTENTS HEREIN.

velocitel® complete wireless solutions
1701 AMERICAN BLVD EAST
SUITE #16
BLOOMINGTON, MN 55425
952-944-1858 (MAIN)
952-944-1506 (FAX)

at&t MOBILITY
901 MARQUETTE AVE.
3RD FLOOR
MINNEAPOLIS, MN 55402

MNL01417
SHOREVIEW
FA# 10116081
3900 BETHEL DRIVE
ARDEN HILLS, MN 55112

NO	DATE	REVISIONS	BY	CHK	APP'D
B	11/05/15	REVISED PER COMMENTS	YS	MZ	–
A	10/05/15	ISSUED FOR REVIEW	YS	MZ	–

SCALE: DESIGNED: CHECKED:

SITE PLAN

FA #	DRAWING NUMBER	REV
10116081	C2	B

NOTE:

EXISTING EQUIPMENT LAYOUT BASED ON INFORMATION FROM PREVIOUS PROJECTS. CONTRACTOR TO VERIFY EXISTING LAYOUT AND ORIENTATION PRIOR TO CONSTRUCTION

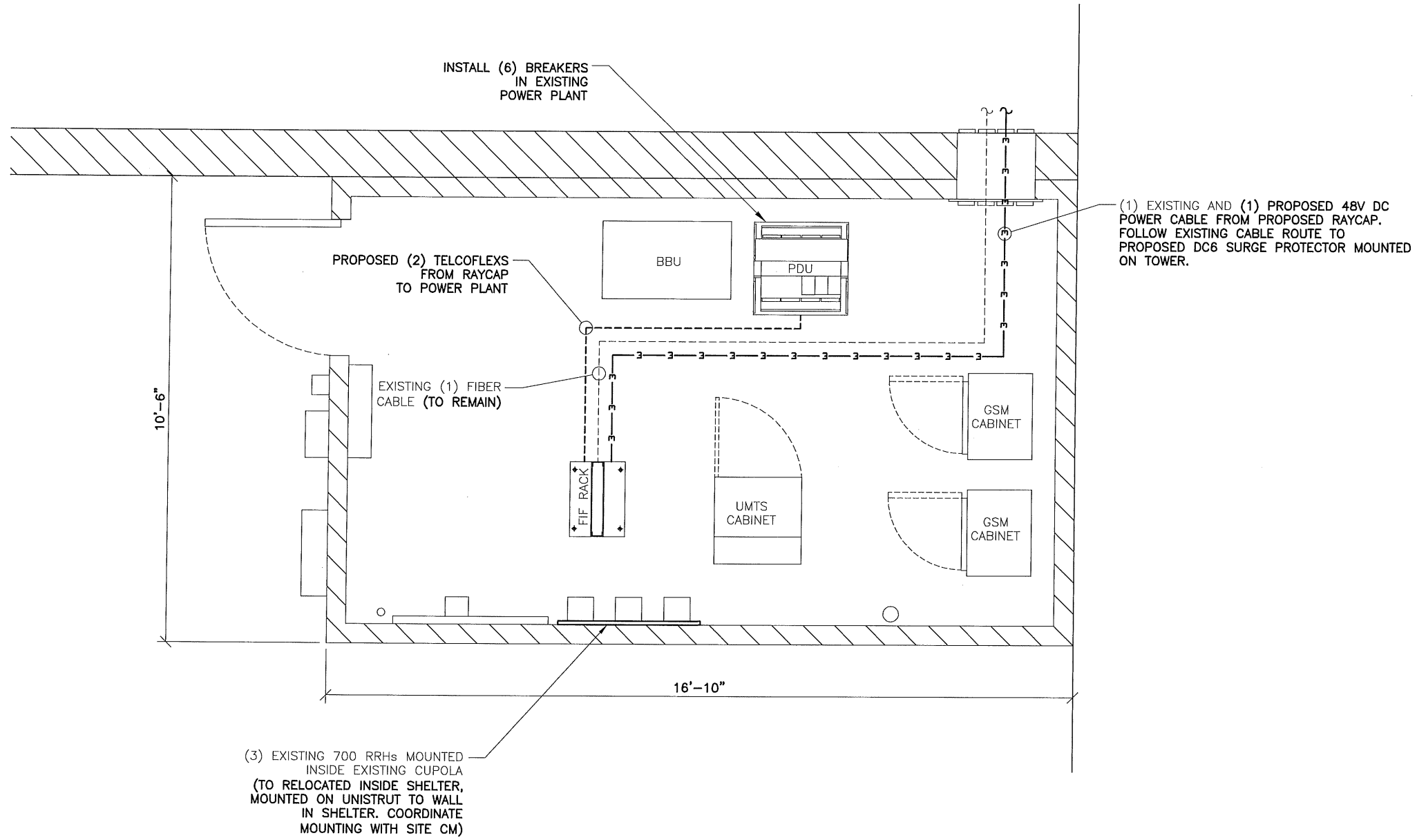

EQUIPMENT PLAN

SCALE: 1"=3'

1

1"=3' 3 0 3

CALLED NORTH

SYMBOLS AND MATERIALS

- D / SH — DETAIL REFERENCE
- SECTIONS AND DETAILS
- CONCRETE
- EARTH
- GRAVEL/STONE

SITE LEGEND

- PROPERTY LINE
- FENCE LINE
- PP — PDU POWER CABLE
- BT — BIAS "T" CABLE
- PA — PDU ALARM CABLE

PRELIMINARY NOT FOR CONSTRUCTION

IT IS A VIOLATION OF LAW FOR ANY PERSON UNLESS THEY ARE ACTING UNDER THE DIRECTION OF A LICENSED PROFESSIONAL ENGINEER TO ALTER THIS DOCUMENT, UNLESS EXPLICITLY AGREED TO BY THE ENGINEER IN WRITING. THE ENGINEER DISCLAIMS ALL LIABILITY ASSOCIATED WITH THE REUSE, ALTERATION OR MODIFICATION OF THE CONTENTS HEREIN.

velocitel® complete wireless solutions
1701 AMERICAN BLVD EAST
SUITE #16
BLOOMINGTON, MN 55425
952-944-1858 (MAIN)
952-944-1506 (FAX)

at&t MOBILITY
901 MARQUETTE AVE.
3RD FLOOR
MINNEAPOLIS, MN 55402

MNL01417
SHOREVIEW
FA# 10116081
3900 BETHEL DRIVE
ARDEN HILLS, MN 55112

NO	DATE	REVISIONS	BY	CHK	APP'D
B	11/05/15	REVISED PER COMMENTS	YS	MZ	–
A	10/05/15	ISSUED FOR REVIEW	YS	MZ	–

SCALE: DESIGNED: CHECKED:

EQUIPMENT LAYOUT PLAN

FA #	DRAWING NUMBER	REV
10116081	C2.1	B

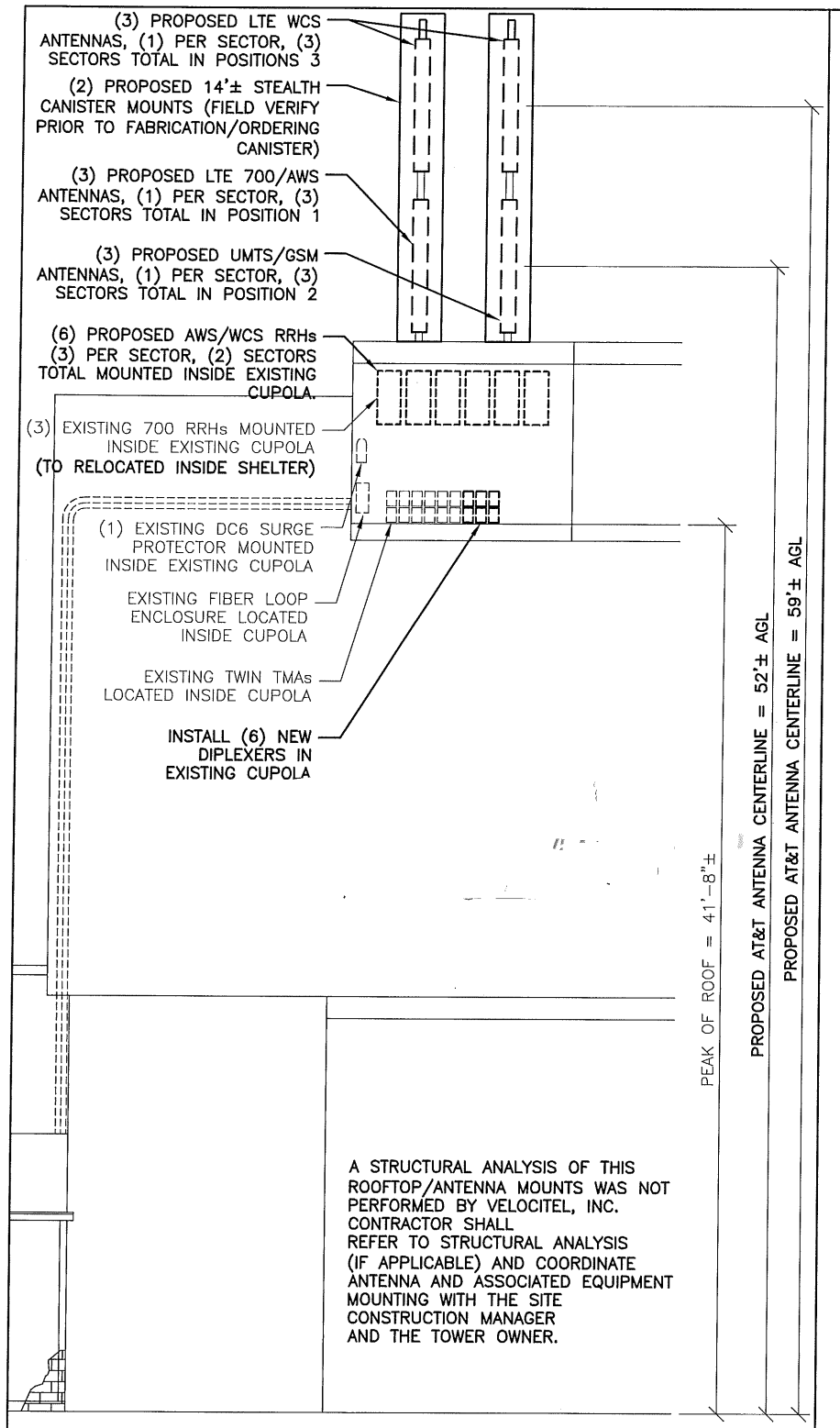

A STRUCTURAL ANALYSIS OF THIS ROOFTOP/ANTENNA MOUNTS WAS NOT PERFORMED BY VELOCITEL, INC. CONTRACTOR SHALL REFER TO STRUCTURAL ANALYSIS (IF APPLICABLE) AND COORDINATE ANTENNA AND ASSOCIATED EQUIPMENT MOUNTING WITH THE SITE CONSTRUCTION MANAGER AND THE TOWER OWNER.

PROPOSED TOWER ELEVATION | 1

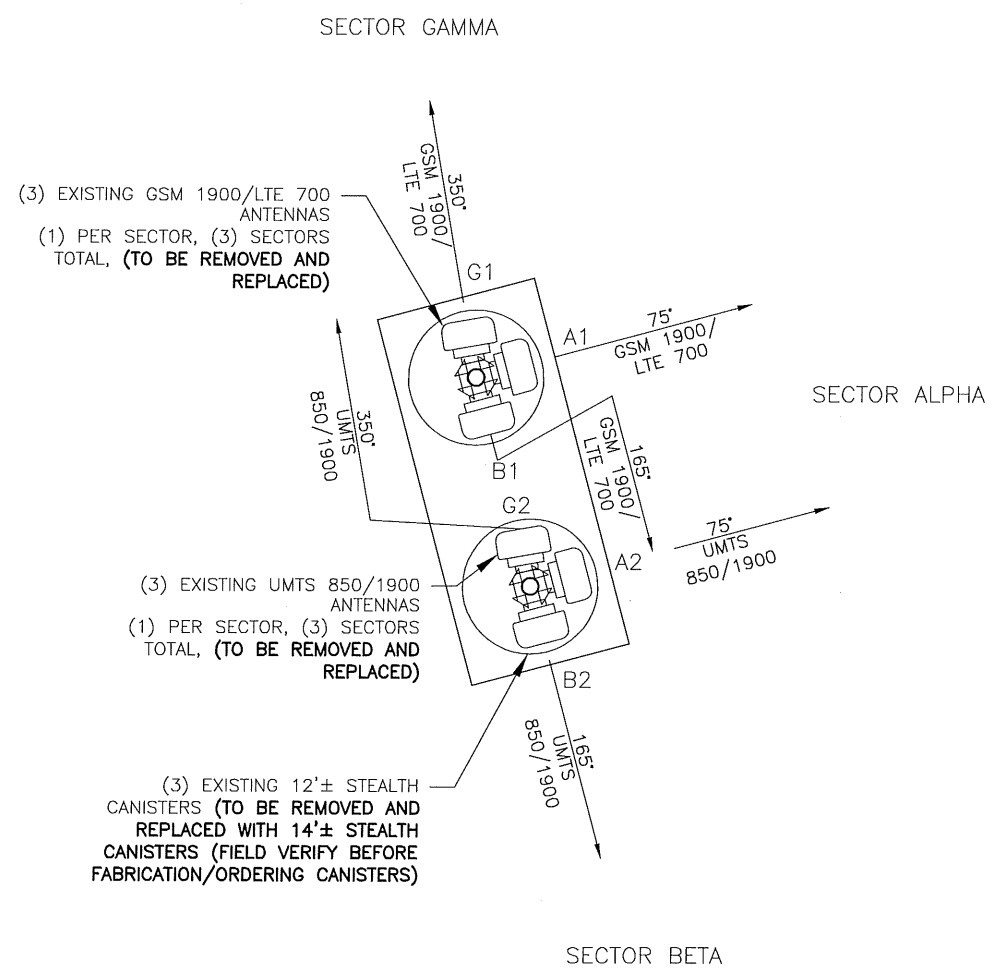

APPROXIMATE TRUE NORTH

* CONTRACTOR TO REFER TO FINAL RF CONFIGURATION PRIOR TO CONSTRUCTION.

EXISTING ANTENNA DETAIL AT 55'-0" ABOVE GRADE | 2

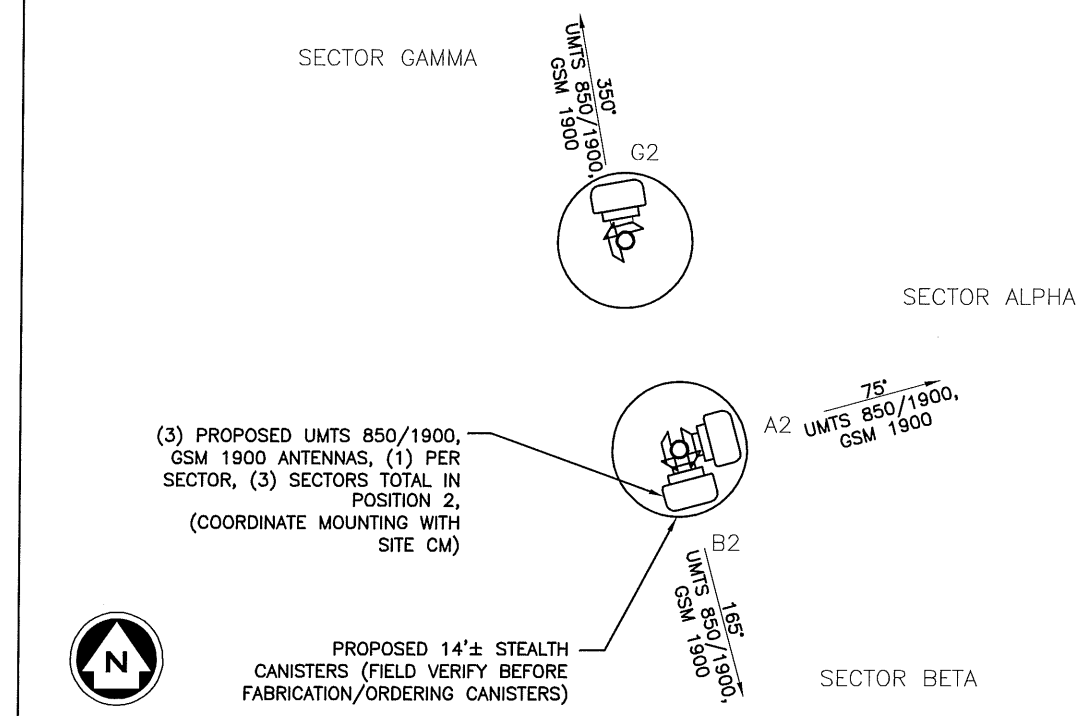

APPROXIMATE TRUE NORTH

* CONTRACTOR TO REFER TO FINAL RF CONFIGURATION PRIOR TO CONSTRUCTION.

PROPOSED ANTENNA DETAIL AT 52'-0" ABOVE GRADE | 3

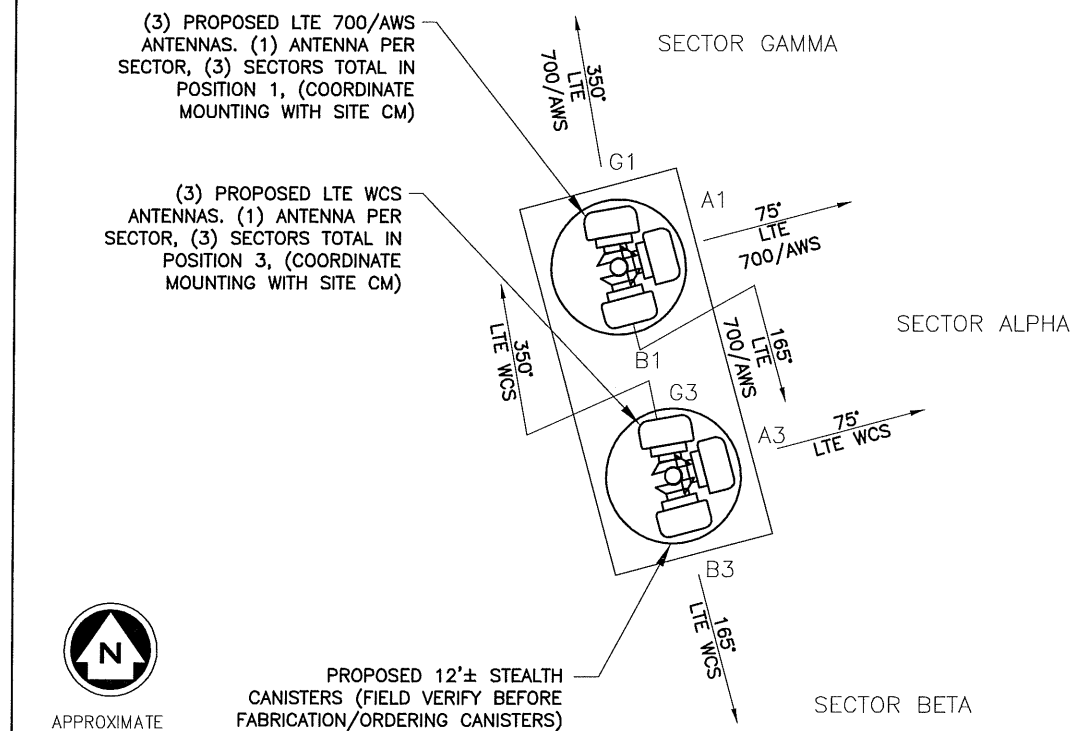

APPROXIMATE TRUE NORTH

* CONTRACTOR TO REFER TO FINAL RF CONFIGURATION PRIOR TO CONSTRUCTION.

PROPOSED ANTENNA FRAME DETAIL AT 59'-0" ABOVE GRADE | 3

PRELIMINARY NOT FOR CONSTRUCTION

IT IS A VIOLATION OF LAW FOR ANY PERSON UNLESS THEY ARE ACTING UNDER THE DIRECTION OF A LICENSED PROFESSIONAL ENGINEER TO ALTER THIS DOCUMENT, UNLESS EXPLICITLY AGREED TO BY THE ENGINEER IN WRITING. THE ENGINEER DISCLAIMS ALL LIABILITY ASSOCIATED WITH THE REUSE, ALTERATION OR MODIFICATION OF THE CONTENTS HEREIN.

velocitel®
complete wireless solutions
1701 AMERICAN BLVD EAST
SUITE #16
BLOOMINGTON, MN 55425
952-944-1858 (MAIN)
952-944-1506 (FAX)

at&t MOBILITY
901 MARQUETTE AVE.
3RD FLOOR
MINNEAPOLIS, MN 55402

MNL01417
SHOREVIEW
FA# 10116081
3900 BETHEL DRIVE
ARDEN HILLS, MN 55112

NO	DATE	REVISIONS	BY	CHK	APP'D
B	11/05/15	REVISED PER COMMENTS	YS	MZ	–
A	10/05/15	ISSUED FOR REVIEW	YS	MZ	–

SCALE: | DESIGNED: | CHECKED:

ELEVATION VIEW & RF DETAILS

FA #	DRAWING NUMBER	REV
10116081	C3	B

PROPOSED ANTENNA CONFIGURATION AND CABLE SCHEDULE

SUPPLIED BY AT&T WIRELESS, FROM RF CONFIG DATED 09/23/2015, BY CORY W THOMAS

SECTOR	POS	TECH	ANTENNA	ANTENNA ℄ HEIGHT	AZIMUTH	TMA/RRU	DC SURGE AND DISTRIBUTION	CABLE TYPE	CABLE LENGTH	DOWNTILTS
A	1	LTE 700/AWS	SBNHH-1D65A (N)	59' AGL	75°	(1) RRH2X40-07AT (IN SHELTER) (X) (1) RRH2X40-AWS+RDEM (N) (1) TT19-08BP111-001 (X)	(1) DC6-48-60-18-8F (X)	(1) FIBER (0.40") (X) (1) DC TRUNK (0.82") (X) (1) DC TRUNK (0.82") (N) (6) 1-1/4" COAX (N) (12) 7/8" COAX (X)	100' (N) *	2°/2°(E) 0°(M)
	2	UMTS 850/1900, GSM 1900	SBNHH-1D65A (N)	52' AGL	75°	(1) TT19-08BP111-001 (X)				2°/2°(E) 0°(M)
	3	LTE WCS	SBNHH-1D65A (N)	59' AGL	75°	(1) RRH4X25-WCS-4R (N)				2°/2°(E) 0°(M)
B	1	LTE 700/AWS	SBNHH-1D65A (N)	59' AGL	165°	(1) RRH2X40-07AT (IN SHELTER) (X) (1) RRH2X40-AWS+RDEM (N) (1) TT19-08BP111-001 (X)				2°/2°(E) 0°(M)
	2	UMTS 850/1900, GSM 1900	SBNHH-1D65A (N)	52' AGL	165°	(1) TT19-08BP111-001 (X)				2°/2°(E) 0°(M)
	3	LTE WCS	SBNHH-1D65A (N)	59' AGL	165°	(1) RRH4X25-WCS-4R (N)				2°/2°(E) 0°(M)
G	1	LTE 700/AWS	SBNHH-1D65A (N)	59' AGL	350°	(1) RRH2X40-07AT (IN SHELTER) (X) (1) RRH2X40-AWS+RDEM (N) (1) TT19-08BP111-001 (X)				2°/2°(E) 0°(M)
	2	UMTS 850/1900, GSM 1900	SBNHH-1D65A (N)	52' AGL	350°	(1) TT19-08BP111-001 (X)				2°/2°(E) 0°(M)
	3	LTE WCS	SBNHH-1D65A (N)	59' AGL	350°	(1) RRH4X25-WCS-4R (N)				2°/2°(E) 0°(M)

* INCLUDES SAFETY FACTOR OF 20 FT. (10 FT. AT BOTH ENDS OF CABLE RUN)

CONTRACTOR TO VERIFY RF DATA WITH AT&T WIRELESS CONSTRUCTION MANAGER AND/OR RF ENGINEER PRIOR TO INSTALLATION.

(X) = EXISTING
(XR) = EXISTING/RELOCATED
(N) = NEW INSTALL
(E) = ELECTRICAL
(M) = MECHANICAL

NOTE:
** DC POWER & FIBER JUMPER LENGTHS TO BE DETERMINED BY SITE CM

PRELIMINARY NOT FOR CONSTRUCTION

IT IS A VIOLATION OF LAW FOR ANY PERSON UNLESS THEY ARE ACTING UNDER THE DIRECTION OF A LICENSED PROFESSIONAL ENGINEER TO ALTER THIS DOCUMENT, UNLESS EXPLICITLY AGREED TO BY THE ENGINEER IN WRITING. THE ENGINEER DISCLAIMS ALL LIABILITY ASSOCIATED WITH THE REUSE, ALTERATION OR MODIFICATION OF THE CONTENTS HEREIN.

velocitel®
complete wireless solutions
1701 AMERICAN BLVD EAST
SUITE #16
BLOOMINGTON, MN 55425
952-944-1858 (MAIN)
952-944-1506 (FAX)

at&t MOBILITY
901 MARQUETTE AVE.
3RD FLOOR
MINNEAPOLIS, MN 55402

MNL01417
SHOREVIEW
FA# 10116081
3900 BETHEL DRIVE
ARDEN HILLS, MN 55112

NO	DATE	REVISIONS	BY	CHK	APP'D
B	11/05/15	REVISED PER COMMENTS	YS	MZ	–
A	10/05/15	ISSUED FOR REVIEW	YS	MZ	–

SCALE: DESIGNED: CHECKED:

ANTENNA & CABLE CONFIGURATION

FA #	DRAWING NUMBER	REV
10116081	C3.1	B

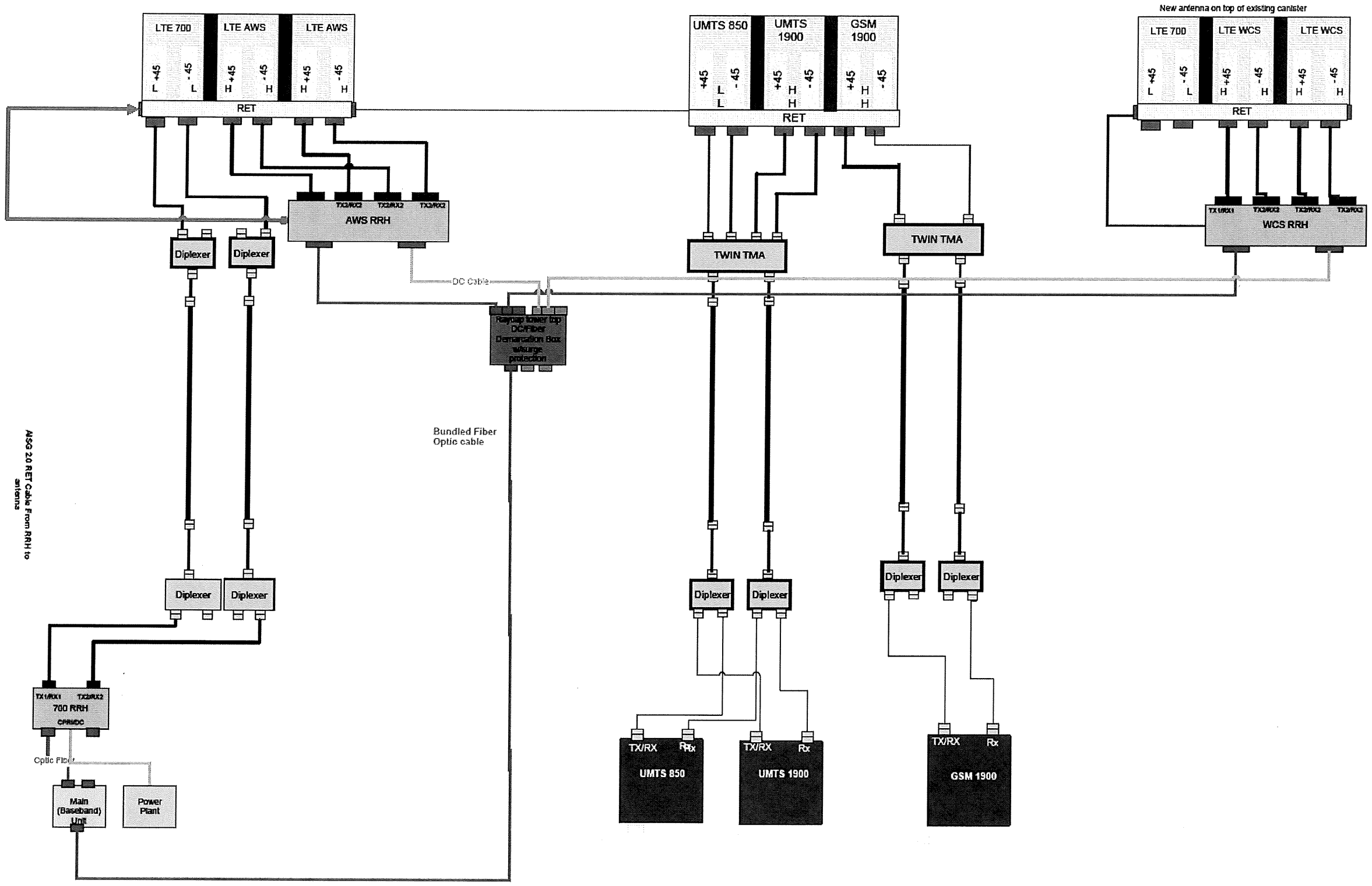

AISG 2.0 RET Cable From RRH to antenna

PRELIMINARY NOT FOR CONSTRUCTION

24"x36" SCALE: NTS
11"x17" SCALE: NTS

PLUMBING DIAGRAM | 1

velocitel®
complete wireless solutions
1701 AMERICAN BLVD EAST
SUITE #16
BLOOMINGTON, MN 55425
952-944-1858 (MAIN)
952-944-1506 (FAX)

at&t MOBILITY
901 MARQUETTE AVE.
3RD FLOOR
MINNEAPOLIS, MN 55402

MNL01417
SHOREVIEW
FA# 10116081
3900 BETHEL DRIVE
ARDEN HILLS, MN 55112

NO.	DATE	REVISIONS	BY	CHK	APP'D
B	11/05/15	REVISED PER COMMENTS	YS	MZ	–
A	10/05/15	ISSUED FOR REVIEW	YS	MZ	–

SCALE: | DESIGNED: | CHECKED:

PLUMBING DIAGRAM

FA #	DRAWING NUMBER	REV
10116081	C3.2	B

IT IS A VIOLATION OF LAW FOR ANY PERSON UNLESS THEY ARE ACTING UNDER THE DIRECTION OF A LICENSED PROFESSIONAL ENGINEER TO ALTER THIS DOCUMENT, UNLESS EXPLICITLY AGREED TO BY THE ENGINEER IN WRITING, THE ENGINEER DISCLAIMS ALL LIABILITY ASSOCIATED WITH THE REUSE, ALTERATION OR MODIFICATION OF THE CONTENTS HEREIN.

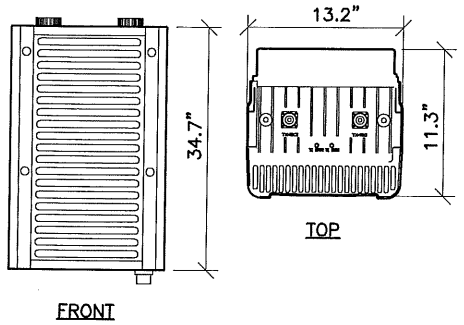

MANUFACTURER: ALCATEL–LUCENT
MODEL: RRH4x25–WCS–4R
HEIGHT: 34.7"
WIDTH: 13.2"
DEPTH: 11.3"
WEIGHT: 91 LBS

24"x36" SCALE: NTS
11"x17" SCALE: NTS

WCS RRH UNIT | 7

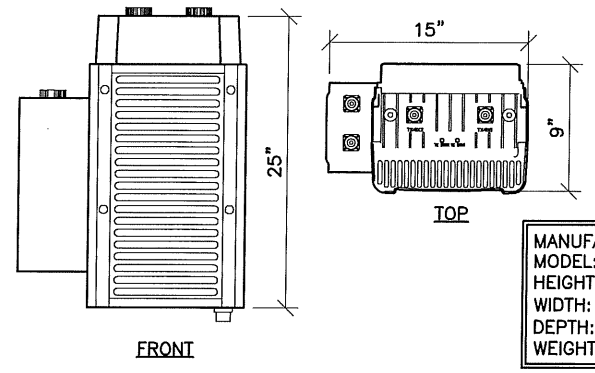

MANUFACTURER: ALCATEL–LUCENT
MODEL: RRH2x40–AWS+RDEM
HEIGHT: 25"
WIDTH: 15"
DEPTH: 9"
WEIGHT: 47.6 LBS

24"x36" SCALE: NTS
11"x17" SCALE: NTS

AWS RRH UNIT | 8

24"x36" SCALE: NTS
11"x17" SCALE: NTS

NOT USED | 5

24"x36" SCALE: NTS
11"x17" SCALE: NTS

NOT USED | 6

24"x36" SCALE: NTS
11"x17" SCALE: NTS

NOT USED | 9

24"x36" SCALE: NTS
11"x17" SCALE: NTS

NOT USED | 10

24"x36" SCALE: NTS
11"x17" SCALE: NTS

NOT USED | 1

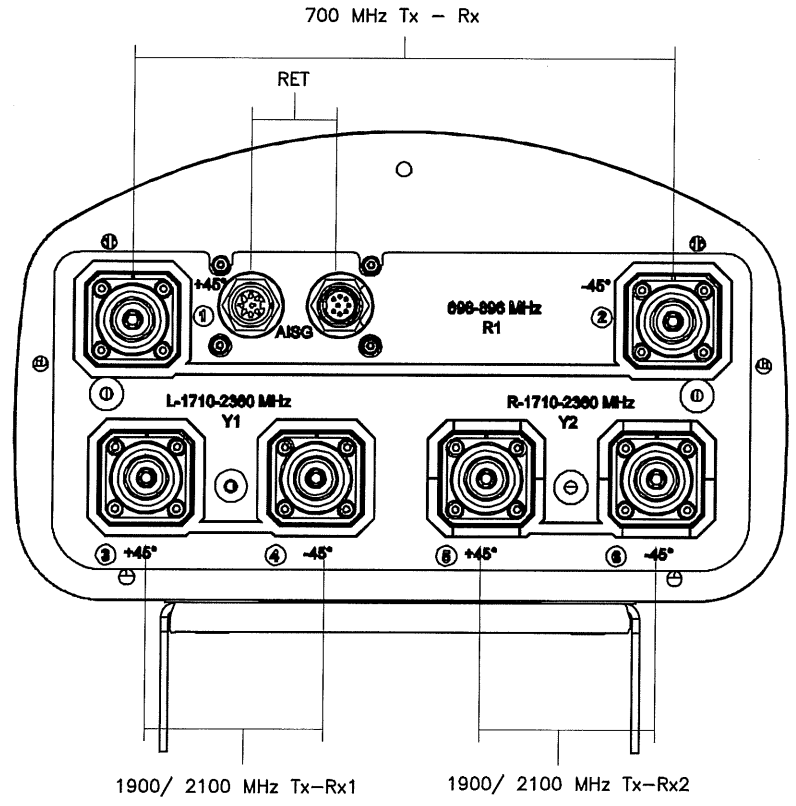

24"x36" SCALE: NTS
11"x17" SCALE: NTS

ANTENNA PORT DETAIL | 2

24"x36" SCALE: NTS
11"x17" SCALE: NTS

NOT USED | 3

MANUFACTURER: ANDREW
PART #: SBNHH–1D65A
LENGTH: 55"
WIDTH: 11.85"
DEPTH: 7.1"
WEIGHT: 40.92 lbs.

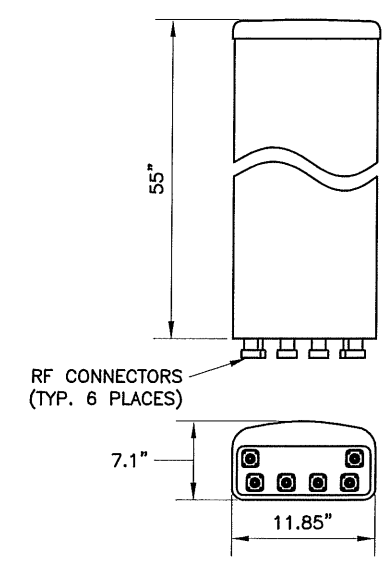

24"x36" SCALE: NTS
11"x17" SCALE: NTS

ANTENNA DETAIL | 4

PRELIMINARY NOT FOR CONSTRUCTION

IT IS A VIOLATION OF LAW FOR ANY PERSON UNLESS THEY ARE ACTING UNDER THE DIRECTION OF A LICENSED PROFESSIONAL ENGINEER TO ALTER THIS DOCUMENT, UNLESS EXPLICITLY AGREED TO BY THE ENGINEER IN WRITING. THE ENGINEER DISCLAIMS ALL LIABILITY ASSOCIATED WITH THE REUSE, ALTERATION OR MODIFICATION OF THE CONTENTS HEREIN.

velocitel®
complete wireless solutions
1701 AMERICAN BLVD EAST
SUITE #16
BLOOMINGTON, MN 55425
952-944-1858 (MAIN)
952-944-1506 (FAX)

at&t MOBILITY
901 MARQUETTE AVE.
3RD FLOOR
MINNEAPOLIS, MN 55402

MNL01417
SHOREVIEW
FA# 10116081
3900 BETHEL DRIVE
ARDEN HILLS, MN 55112

NO	DATE	REVISIONS	BY	CHK	APP'D
B	11/05/15	REVISED PER COMMENTS	YS	MZ	–
A	10/05/15	ISSUED FOR REVIEW	YS	MZ	–

SCALE: | DESIGNED: | CHECKED:

ANTENNA DETAILS

FA #	DRAWING NUMBER	REV
10116081	C4	B

GENERAL NOTES

1. INSPECTIONS

   A. GENERAL: DURING AND UPON COMPLETION OF THE WORK, ARRANGE AND PAY ALL ASSOCIATED INSPECTIONS OF ALL ELECTRICAL WORK INSTALLED UNDER THIS CONTRACT IN ACCORDANCE WITH THE CONDITIONS OF THE CONTRACT. INSTALLATION SHALL COMPLY WITH APPLICABLE LAWS AND ORDINANCES, UTILITY COMPANY REQUIREMENTS, AND THE LATEST EDITION OF NEC, NFC, NEMA, OSHA, SBC, AND UL.

   B. INSPECTIONS REQUIRED: AS PER THE LAWS AND REGULATIONS OF THE LOCAL AND/OR STATE AGENCIES HAVING JURISDICTION AT THE PROJECT SITE.

   C. INSPECTION AGENCY: APPROVED BY THE LOCAL AND/OR STATE AGENCIES HAVING JURISDICTION AT THE PROJECT SITE.

   D. CERTIFICATES: SUBMIT ALL REQUIRED INSPECTION CERTIFICATES.

2. HANGERS AND SUPPORTS

   A. MATERIALS: ALL HANGERS, SUPPORTS, FASTENERS AND HARDWARE SHALL BE STAINLESS STEEL OR OF EQUIVALENT CORROSION RESISTANCE BY TREATMENT OR INHERENT PROPERTY, AND SHALL BE MANUFACTURED PRODUCTS DESIGNED FOR THE APPLICATION. PRODUCTS FOR OUTDOOR USE SHALL BE HOT DIP GALVANIZED.

   B. TYPES: HANGERS, STRAPS, RISER SUPPORTS, CLAMPS, U-CHANNEL, THREADED RODS, ETC. AS INDICATED OR REQUIRED.

   C. INSTALLATION: RIGIDLY SUPPORT AND SECURE ALL MATERIALS, RACEWAY AND EQUIPMENT TO BUILDING STRUCTURE USING HANGERS, SUPPORTS AND FASTENERS SUITABLE FOR THE USE. MATERIALS AND LOADS ENCOUNTERED. PROVIDE ALL NECESSARY HARDWARE. PROVIDE CONDUIT SUPPORTS AT MAXIMUM 5 FT. O.C.

   D: STRUCTURAL MEMBERS: DO NOT CUT, DRILL, OR WELD ANY STRUCTURAL MEMBER EXCEPT AS SPECIFICALLY APPROVED BY THE ENGINEER.

   E. MISCELLANEOUS SUPPORTS: PROVIDE ANY ADDITIONAL STRUCTURAL SUPPORT STEEL BRACKETS, ANGLES, FASTENERS AND HARDWARE AS REQUIRED TO ADEQUATELY SUPPORT ALL ELECTRICAL MATERIALS AND EQUIPMENT.

   F. ONE HOLE STRAPS SHALL NOT BE USED FOR CONDUITS LARGER THAN 3/4 INCH.

3. ENCLOSURES

   A. NEMA 3R

4. HOLES, SLEEVES AND OPENINGS

   GENERAL: PROVIDE ALL HOLES, SLEEVES, AND OPENINGS REQUIRED FOR THE COMPLETION OF WORK AND RESTORE ALL SURFACES DAMAGED TO MATCH SURROUNDING SURFACES.

5. CUTTING AND PATCHING

   A. GENERAL: PROVIDE ALL CUTTING, DRILLING, FITTING AND PATCHING NECESSARY FOR ACCOMPLISHING THE WORK. THIS INCLUDES ANY AND ALL WORK NECESSARY TO: UNCOVER WORK TO PROVIDE FOR THE INSTALLATION OF ILL TIMED WORK, REMOVE AND REPLACE DEFECTIVE WORK AND WORK NOT CONFORMING TO THE REQUIREMENTS OF THE CONTRACT DOCUMENTS.

   B. REPAIRS: REPAIR ANY AND ALL DAMAGE TO WORK OF OTHER TRADES CAUSED BY CUTTING AND PATCHING OPERATIONS, USING SKILLED MECHANICS OF THE TRADES INVOLVED.

6. RACEWAY SYSTEMS

   A. ALL ABOVE GRADE CONDUIT AND ALL CONDUIT ELBOWS SHALL BE RIGID GALVANIZED STEEL UNLESS NOTED OTHERWISE.

7. CONDUCTORS

   USE 98% CONDUCTIVITY COPPER WITH TYPE XHHW-2 INSULATION, 600 VOLT, COLOR CODED. USE SOLID CONDUCTORS FOR WIRE UP TO AND INCLUDING NO. 8 AWG, STRANDED CONDUCTORS FOR WIRE LARGER THAN NO. 8. USE PRESSURE-TYPE INSULATED TWIST-ON CONNECTORS FOR NO. 10 AWG AND SMALLER, SOLDERLESS MECHANICAL TERMINAL LUGS FOR NO. 8 AWG AND LARGER.

8. GROUNDING SYSTEM

   A. INSTALLATION: INSTALL AS REQUIRED PER SPECIFICATION. CONTRACTOR REPRESENTATIVE WILL INSPECT EXOTHERMIC WELDS AND CONDUCT MEGGER TEST PRIOR TO BURIAL. MAXIMUM 5 OHMS RESISTANCE IS REQUIRED, WHEN MORE THAT (4) ADDITIONAL GROUNDS ARE REQUIRED, VERIFY OHM LEVEL PRIOR TO CONSTRUCTION. USE CLEAN SAND AND CLAYBACKFILL FOR BURIED GROUND CONDUCTORS.

9. CHECKOUT, TESTING AND ADJUSTING

   A. CORRECTION/REPLACEMENT: AFTER TESTING BY CONTRACTOR, OWNER OR ENGINEER, CORRECT ANY DEFICIENCIES AND REPLACE MATERIALS AND EQUIPMENT SHOWN TO BE DEFECTIVE OR UNABLE TO PERFORM AT DESIGN OR RATED CAPACITY.

   B. POWER CONDUCTORS: CONTRACTOR SHALL CONDUCT A CONTINUITY & INSULATION TEST ON CONDUCTORS BETWEEN SERVICE DISCONNECT SWITCH & POWER CABINET.

   C. WHEN SITE POWER IS DERIVED FROM 3 PHASE SOURCE, LOAD READINGS WILL BE TAKEN AND RECORDED TO MAINTAIN A BALANCED LOAD AT THE PRIMARY SOURCE. RECORDS SHALL BE TURNED IN TO THE OWNER'S REPRESENTATIVE.

RF NOTES:

1. ACTUAL LENGTHS SHALL BE DETERMINED PER SITE CONDITION BY SUBCONTRACTOR.
2. THE DESIGN IS BASED ON RF DATA SHEETS, SIGNED AND APPROVED.
3. RADIO SIGNAL CABLE AND RACEWAY SHALL COMPLY WITH THE REQUIREMENTS OF THE NATIONAL ELECTRICAL CODE (NEC, NFPA 70), CHAPTER 8.
4. ALL SPECIFIED MATERIAL FOR EACH LOCATION (E.G. OUTDOORS-OCCUPIED, INDOORS-UNOCCUPIED,PLENUMS, RISER SHAFTS, ETC.) SHALL BE APPROVED, LISTED, OR LABELED AS REQUIRED BY THE NEC.
5. RADIO SIGNAL CABLE SHALL BE SUPPORTED AT MINIMUM OF EVERY THREE (3) FEET EXCEPT INSIDE MONOPOLES OR LATTICE TOWERS WHERE CABLE AND CONNECTOR MANUFACTURER'S SUPPORT RECOMMENDATIONS SHALL BE FOLLOWED. RF JUMPERS SHALL BE SUPPORTED AT A MAXIMUM OF TWO (2) FEET, AND WITHIN 18" OF CONNECTOR. MANUFACTURER RECOMMENDED CABLE SUPPORT ACCESSORIES SHALL BE USED.
6. THE OUTDOOR CABLE SUPPORT SYSTEM SHALL BE PROVIDED WITH AN ICE SHIELD TO SUPPORT AND PROTECT ANTENNA CABLE RUNS.
7. DRIP LOOPS SHALL BE REQUIRED ON ALL OUTSIDE CABLES. CABLES SHALL BE SLOPED AWAY FROM BUILDING OR OUTDOOR BTS CABINETS TO PREVENT WATER FROM ENTERING THROUGH THE COAXIAL CABLE PORT.
8. ALL FEEDER LINE AND JUMPER CONNECTORS SHALL BE 7/16 DIN CABLE CONNECTORS THAT MEET IP68 STANDARDS.
9. 7/16 DIN CONNECTORS REQUIRE NO ADDITIONAL WEATHER PROOFING IN INDOOR APPLICATIONS IF INSTALLED AND TORQUED PROPERLY. IN OUTDOOR APPLICATIONS, WEATHER PROOFING IS REQUIRED AND THE FOLLOWING PROCEDURE SHOULD BE FOLLOWED.
10. USING WEATHERPROOFING KIT APPROVED BY CABLE MANUFACTURER AND CONTRACTOR, START TAPE APPROXIMATELY 5 INCHES FROM THE CONNECTOR AND WRAP 2 INCHES TOWARD THE CONNECTOR, THEN REVERSE THE TAPE SO THAT THE STICKY SIDE IS UP. TAPE OVER THE CONNECTOR OR SURGE ARRESTOR UNTIL THREE (3) TO FOUR (4) INCHES BEYOND THE CONNECTOR AND REVERSE AGAIN WITH THE STICKY SIDE DOWN FOR ANOTHER INCH OR TWO. ADD THE BUTYL RUBBER AND FINISH WITH A FINAL LAYER OF TAPE.
11. ANTENNAS AND COAX SHALL BE PAINTED, WHEN REQUIRED, BY THE LANDLORD OR AUTHORITY HAVING JURISDICTION IN ACCORDANCE WITH ANTENNA MANUFACTURERS' SURFACES' PREPARATION AND PAINTING REQUIREMENTS.
12. CABLE SHIELDS, AND TOWER CONDUITS SHALL BE GROUNDED AT THE TOP OF THE TOWER, WITHIN 10 FEET OF THEIR CONNECTORS, AND AT THE BOTTOM OF THE TOWER ABOUT 6 INCHES BEFORE THEY TURN TOWARD THE FACILITY. THEY SHALL BE GROUNDED AT THE MIDPOINT OF THE TOWERS THAT ARE BETWEEN 100 FEET AND 200 FEET HIGH, AND AT INTERVALS OF 100 FEET OR LESS ON TOWERS THAT ARE HIGHER THAN 200 FEET.
13. APPROVED GROUNDING KITS, WHICH INCLUDE GROUNDING STRAPS, SHALL BE USED TO GROUND THE COAXIAL CABLE SHIELDS, AND CONDUITS. THE GROUND CONDUCTORS FOR THE KITS AT THE TOP OF THE TOWER, AND IN THE MIDDLE SECTION OF THE TOWER, ARE BONDED DIRECTLY TO GROUND BAR USING EXOTHERMIC OR COMPRESSION CONNECTIONS.
14. ALL RADIO SIGNAL CABLE SHALL BE LABELED PER MARKET REQUIREMENTS.
15. ANTENNA FEED LINE SYSTEM SWEEP TESTING SHALL BE PERFORMED AND REPORTED IN ACCORDANCE WITH CARRIER REQUIREMENTS. CONTRACTOR WILL NOT ACCEPT A RADIO SIGNAL CABLE INSTALLATION WITH UNSATISFACTORY SWEEP TEST RESULTS. THERE SHALL ALSO BE A HARD COPY OF SWEEPS LEFT AT SITE UPON COMPLETION OF SWEEP TEST.

PRELIMINARY NOT FOR CONSTRUCTION

IT IS A VIOLATION OF LAW FOR ANY PERSON UNLESS THEY ARE ACTING UNDER THE DIRECTION OF A LICENSED PROFESSIONAL ENGINEER TO ALTER THIS DOCUMENT. UNLESS EXPLICITLY AGREED TO BY THE ENGINEER IN WRITING, THE ENGINEER DISCLAIMS ALL LIABILITY ASSOCIATED WITH THE REUSE, ALTERATION OR MODIFICATION OF THE CONTENTS HEREIN.

velocitel®
complete wireless solutions
1701 AMERICAN BLVD EAST
SUITE #16
BLOOMINGTON, MN 55425
952-944-1858 (MAIN)
952-944-1506 (FAX)

at&t MOBILITY
901 MARQUETTE AVE.
3RD FLOOR
MINNEAPOLIS, MN 55402

MNL01417
SHOREVIEW
FA# 10116081
3900 BETHEL DRIVE
ARDEN HILLS, MN 55112

NO	DATE	REVISIONS	BY	CHK	APP'D
B	11/05/15	REVISED PER COMMENTS	YS	MZ	–
A	10/05/15	ISSUED FOR REVIEW	YS	MZ	–

SCALE: DESIGNED: CHECKED:

GROUNDING & RF NOTES

FA #	DRAWING NUMBER	REV
10116081	E1	B

NOTE: ALL GROUNDING AND POWER MECHANCICAL CONNECTIONS ARE REQUIRED TO HAVE AN ANTI–OXIDATION COMPOUND

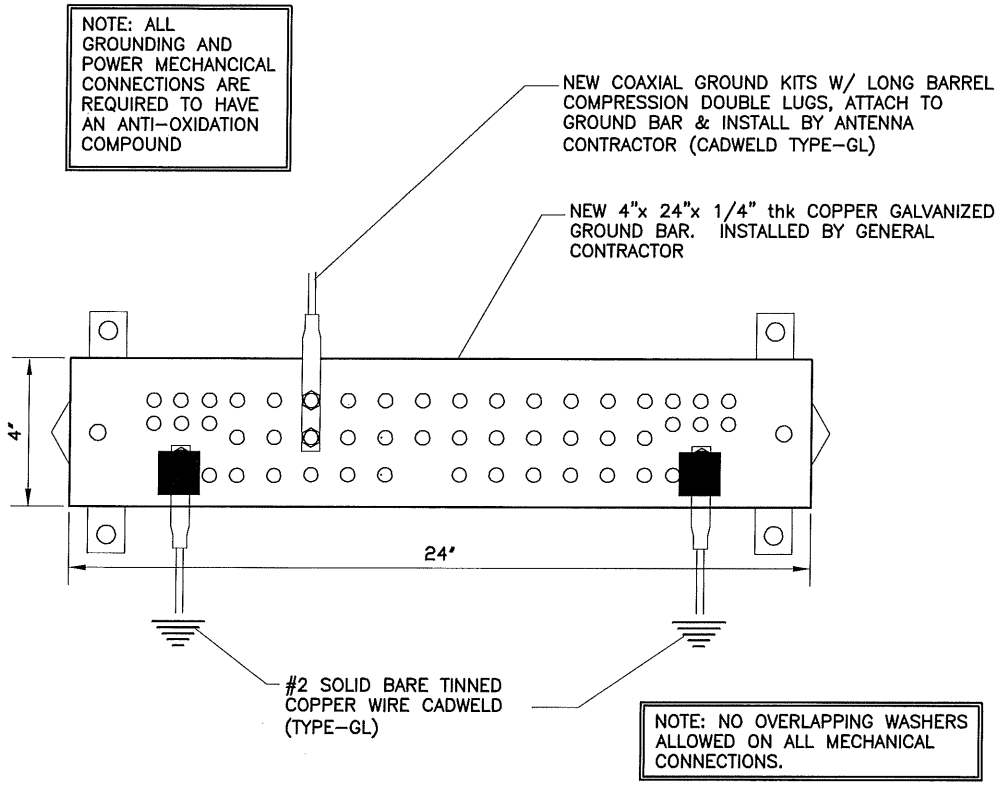

NOTE: NO OVERLAPPING WASHERS ALLOWED ON ALL MECHANICAL CONNECTIONS.

24"x36" SCALE: NTS
11"x17" SCALE: NTS

EQUIPMENT GROUND CONNECTION | 1

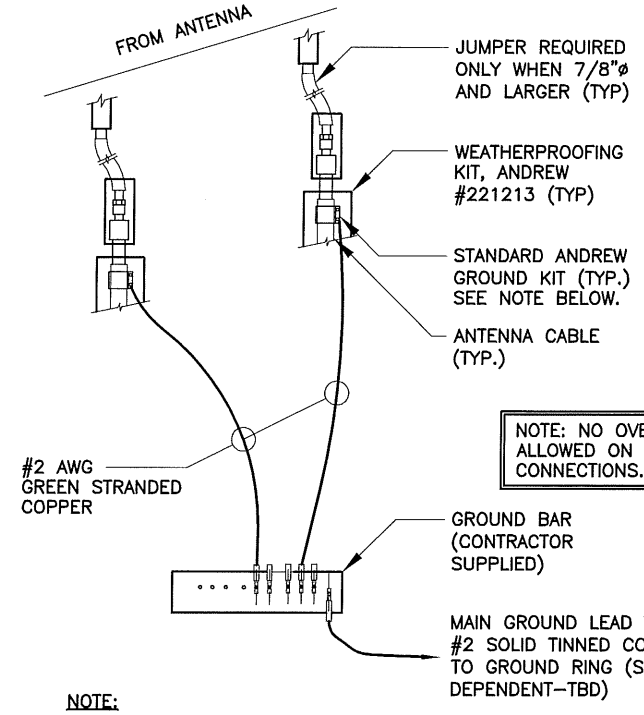

NOTE: NO OVERLAPPING WASHERS ALLOWED ON ALL MECHANICAL CONNECTIONS.

NOTE:
DO NOT INSTALL CABLE GROUND KIT AT A BEND ALWAYS DIRECT GROUND WIRE DOWN TO COAX ISOLATED GROUND BAR EXTERNAL (CIGBE).

24"x36" SCALE: NTS
11"x17" SCALE: NTS

CONNECTION OF GROUND WIRES TO GROUNDING BARS (TOWER/MONOPOLE/ROOFTOP) | 2

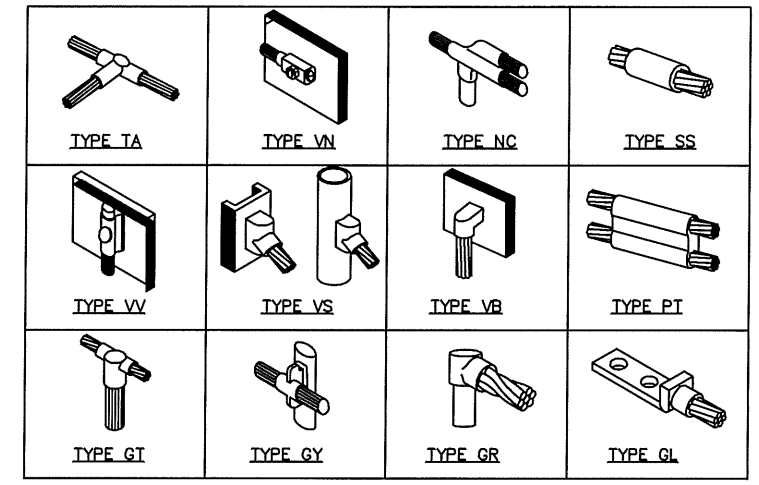

NOTE: CADWELD "TYPES" SHOWN ABOVE ARE EXAMPLES – CONSULT WITH PROJECT MANAGER FOR SPECIFIC TYPES OF CADWELDS TO BE USED FOR THIS PROJECT.

24"x36" SCALE: NTS
11"x17" SCALE: NTS

CADWELD DETAILS | 3

NOTE: ALL GROUNDING AND POWER MECHANCICAL CONNECTIONS ARE REQUIRED TO HAVE AN ANTI–OXIDATION COMPOUND

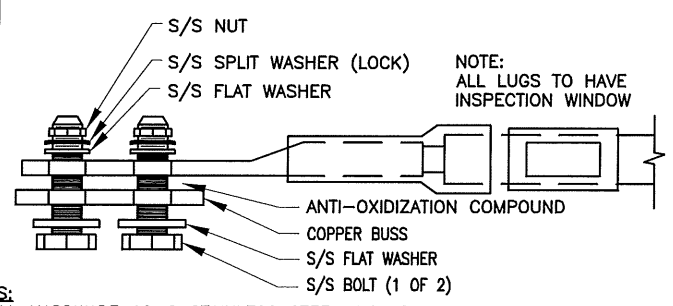

NOTES:
1. ALL HARDWARE 18–8 STAINLESS STEEL INCLUDING BELLEVILLES. COAT ALL SURFACES WITH ANIT–OXIDIZATION COMPOUND BEFORE MATING. (ALL BOLTS ARE TO BE INSTALLED UP AND OUT)
2. YOU MAY UTILIZE THE SAME HARDWARE TO CONNECT TWO LUGS TO THE SAME POSITION BUT THEY MUST SANDWICH THE GROUND BAR BETWEEN THEM AND NOT STACK THEM ON TOP OF EACH OTHER ON THE SAME SIDE OF BUS BAR
3. FLAT WASHERS MUST BE THE CORRECT DIAMETER TO PREVENT OVERLAP (TYPICALLY SAME OD AS THE SPLIT WASHER)
4. CONNECTIONS MUST BE TIGHT. ENSURE THE SPLIT WASHER IS FULLY COMPRESSED.

NOTE:
INDOOR LUGS REQUIRE INSPECTION WINDOWS. OUTDOOR LUGS DO NOT REQUIRE INSPECTION WINDOWS.

24"x36" SCALE: NTS
11"x17" SCALE: NTS

GROUND LUG DETAIL | 4

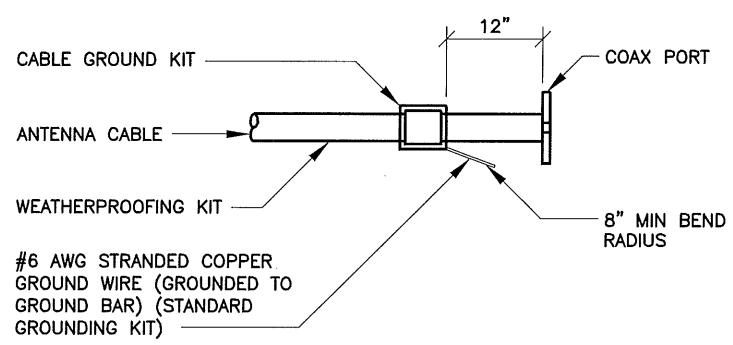

NOTE:
DO NOT INSTALL CABLE GROUND KIT AT A BEND AND ALWAYS DIRECT GROUND WIRE DOWN TO GROUND BAR.

24"x36" SCALE: NTS
11"x17" SCALE: NTS

CABLE GROUND KIT CONNECTION TO ANTENNA CABLE | 5

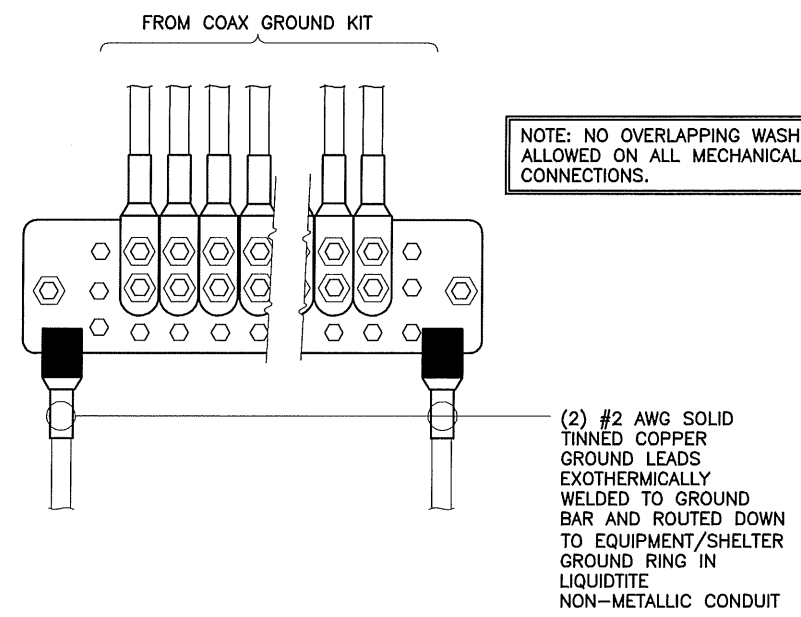

NOTE: NO OVERLAPPING WASHERS ALLOWED ON ALL MECHANICAL CONNECTIONS.

NOTES:
1. 1. MAIN GROUND BUSS BAR IS LOCATED BELOW COAX ENTRY PORT OR BELOW COAX AT END OF ICE BRIDGE FOR OUTDOOR EQUIPMENT.

24"x36" SCALE: NTS
11"x17" SCALE: NTS

MAIN GROUND BUSS BAR DETAIL | 6

PRELIMINARY NOT FOR CONSTRUCTION

IT IS A VIOLATION OF LAW FOR ANY PERSON UNLESS THEY ARE ACTING UNDER THE DIRECTION OF A LICENSED PROFESSIONAL ENGINEER TO ALTER THIS DOCUMENT. UNLESS EXPLICITLY AGREED TO BY THE ENGINEER IN WRITING, THE ENGINEER DISCLAIMS ALL LIABILITY ASSOCIATED WITH THE REUSE, ALTERATION OR MODIFICATION OF THE CONTENTS HEREIN.

velocitel®
complete wireless solutions
1701 AMERICAN BLVD EAST
SUITE #16
BLOOMINGTON, MN 55425
952-944-1858 (MAIN)
952-944-1506 (FAX)

at&t MOBILITY
901 MARQUETTE AVE.
3RD FLOOR
MINNEAPOLIS, MN 55402

MNL01417
SHOREVIEW
FA# 10116081
3900 BETHEL DRIVE
ARDEN HILLS, MN 55112

NO	DATE	REVISIONS	BY	CHK	APP'D
B	11/05/15	REVISED PER COMMENTS	YS	MZ	–
A	10/05/15	ISSUED FOR REVIEW	YS	MZ	–

SCALE: DESIGNED: CHECKED:

GROUNDING DETAILS

FA #	DRAWING NUMBER	REV
10116081	E2	B

NOTES:

P–SECTION:
THE PRODUCERS, OR "P" SECTION IS FOR CONNECTING SURGE PRODUCERS. ALL DC POWER EQUIPMENT, SURGE ARRESTORS, AND NON–COMMUNICATIONS CABINETS AND FRAMES ARE GROUNDED TO THE "P" SECTION. AN EXCEPTION IS BATTERY STANDS, LIKE THOSE USED FOR THE LARGE TWO–VOLT BATTERY ARRAYS, SUCH AS ABSOLUTE BATTERIES. THE DC POWER PLANT RETURN BUSS MASTER GROUND AND THE CABLE ENTRY PORT (HATCH PLATE) INSIDE GROUND ARE ALSO CONNECTED TO THIS SECTION.

A–SECTION:
THE ABSORBERS, OR "A" SECTION ACTS LIKE A SUMP TO CARRY OFF THE SURGE CURRENT FROM THE "P" SECTION AND TO ISOLATE THESE SURGES FROM THE "I" SECTION, WHERE THE ISOLATED COMMUNICATIONS EQUIPMENT IS CONNECTED. THE HALO INTERCONNECTION AND THE TWO HOME RUNS TO THE BGR ARE CONNECTED TO THIS SECTION.

I–SECTION:
"I" STANDS FOR ISOLATED EQUIPMENT. THIS IS FOR GROUNDING THE ISOLATED BONDING NETWORK WHERE ALL COMMUNICATIONS PATH EQUIPMENTIS CONNECTED.

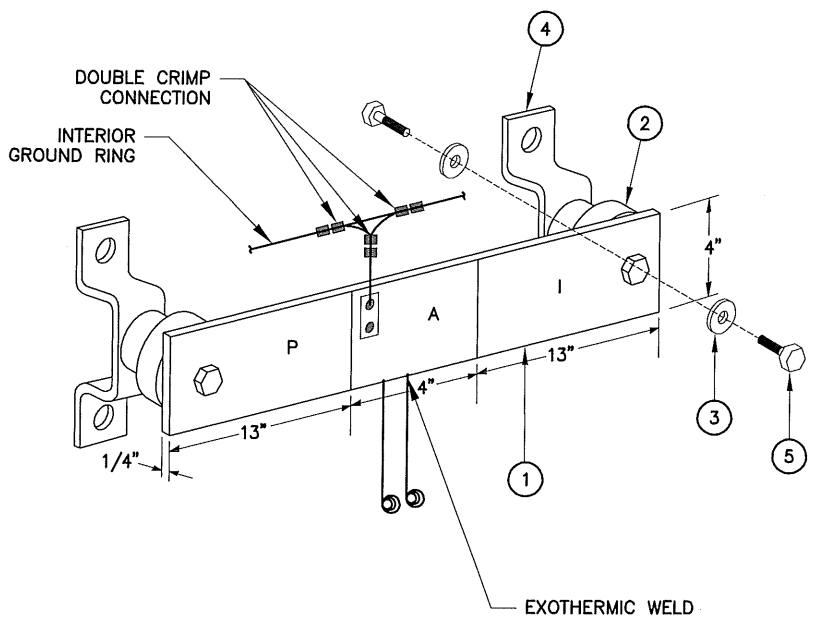

LEGEND

1 – COPPER GROUND BAR, 1/4"x 13"x 4"x 13"
2 – INSULATORS (NO INSULATORS ON TOWER)
3 – 5/8" LOCK WASHERS
4 – MOUNTING BRACKET (MOUNT HORIZONTAL ON VERTICAL CABLE LADDER)
5 – 5/8–11 X 1" H.H.C.S.BOLTS

24"x36" SCALE: NTS
11"x17" SCALE: NTS

GROUND BAR DETAIL 1

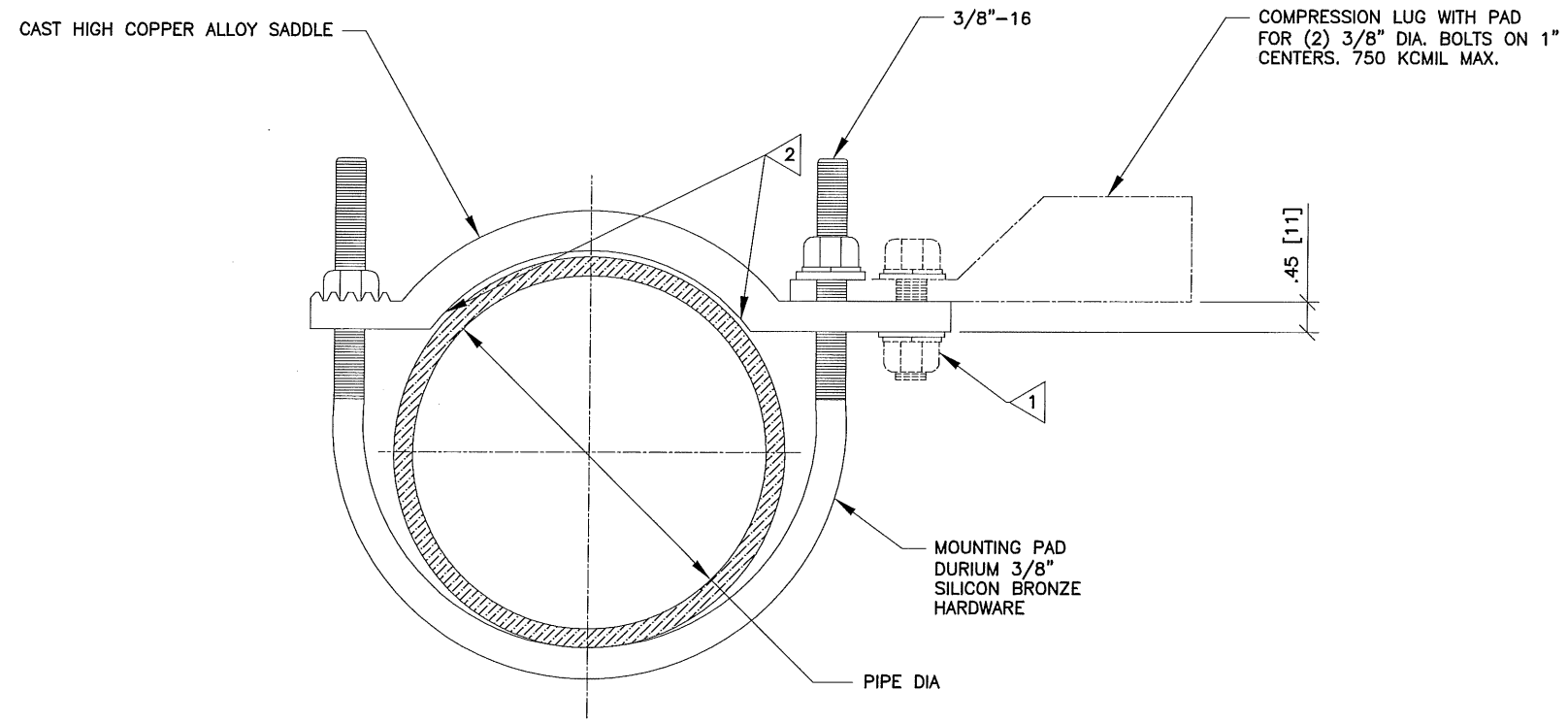

1 DURIUM (SILICON BRONZE) HARDWARE KIT (CAT # TMH 289). (ORDER SEPARATELY) INCL: (1) 38x125 HEB, (1) 38C HEN, (1) 38 SW, (1) 38 FW

2 PREPARE PIPE SURFACE TO VIRGIN METAL SHINE UNDER BRASS SADDLE CONTACT AREA. APPLY CLAMP SADDLE TO SHINING METAL SURFACE TIGHTENING TORQUE 240 IN*LBS.. [27.1Nm] SEAL SADDLE PERIMETER BY APPLYING OXIDE INHIBITING COMPOUND, BURNDY PEN–E OR EQUIVALENT.

24"x36" SCALE: NTS
11"x17" SCALE: NTS

BURNDY TYPE CAR-TC CLAMP DETAIL 2

PRELIMINARY NOT FOR CONSTRUCTION

IT IS A VIOLATION OF LAW FOR ANY PERSON UNLESS THEY ARE ACTING UNDER THE DIRECTION OF A LICENSED PROFESSIONAL ENGINEER TO ALTER THIS DOCUMENT. UNLESS EXPLICITLY AGREED TO BY THE ENGINEER IN WRITING, THE ENGINEER DISCLAIMS ALL LIABILITY ASSOCIATED WITH THE REUSE, ALTERATION OR MODIFICATION OF THE CONTENTS HEREIN.

velocitel®
complete wireless solutions
1701 AMERICAN BLVD EAST
SUITE #16
BLOOMINGTON, MN 55425
952-944-1858 (MAIN)
952-944-1506 (FAX)

at&t MOBILITY
901 MARQUETTE AVE.
3RD FLOOR
MINNEAPOLIS, MN 55402

MNL01417
SHOREVIEW
FA# 10116081
3900 BETHEL DRIVE
ARDEN HILLS, MN 55112

NO	DATE	REVISIONS	BY	CHK	APP'D
B	11/05/15	REVISED PER COMMENTS	YS	MZ	–
A	10/05/15	ISSUED FOR REVIEW	YS	MZ	–

SCALE: DESIGNED: CHECKED:

GROUNDING DETAILS

FA #	DRAWING NUMBER	REV
10116081	E2.1	B

ELECTRICAL SPECIFICATION:

1 ALL ELECTRICAL WORK SHALL BE COMPLETED IN ACCORDANCE WITH THE LATEST EDITION OF THE NATIONAL ELECTRICAL CODE.

2. COMPLY WITH THE LATEST EDITION OF THE UNIFORM BUILDING CODE, THE REQUIREMENTS OF ALL APPLICABLE MUNICIPAL AND STATE CODES AND REGULATIONS, AND UTILITY GUIDELINES.

3. PERFORM ALL VERIFICATION, OBSERVATIONS, TESTING AND EXAMINATION OF WORK PRIOR TO THE ORDERING OF ELECTRICAL EQUIPMENT AND THE ACTUAL CONSTRUCTION. ISSUE A WRITTEN NOTICE OF ALL FINDINGS TO THE CONSTRUCTION MANAGER LISTING ALL MALFUNCTIONS, FAULTY EQUIPMENT AND DISCREPANCIES.

4. UNDERGROUND CONDUIT SHALL BE RIGID POLYVINYL CHLORIDE CONDUIT: SCHEDULE 40, TYPE " CONFORMING TO UL ARTICLE 651: WESTERN PLASTICS OR CARBON MANUFACTURER. COUPLINGS SHALL BE SLIP–ON SOLVENT SEALED T PIPE: SOLVENT, WESTERN TYPE COMPATIBLE WITH PVC DUCT, ALL BENDS SHALL BE 30" MINIMUM RADIUS.

5. ALL WIRING SHALL BE STRANDED COPPER WITH MINIMUM 600V INSULATION (UNLESS OTHERWISE NOTED).

6. NEUTRAL SHALL BE COLOR CODED, INSULATION SHALL BE CROSS–LINKED POLYETHYLENE.

7. CONTRACTOR TO CONTACT ALL UTILITIES FOR LOCATION OF UNDERGROUND SERVICES. SERVICE LOCATIONS TO BE CONFIRMED PRIOR TO CONSTRUCTION.

8. THE CONTRACTOR IS RESPONSIBLE FOR ALL PERMITTING, FILING, AND FEES IN CONJUNCTION WITH THE PROJECT.

9. THE CONTRACTOR SHALL SCHEDULE ALL NECESSARY INSPECTIONS WITH THE PROPER AUTHORITIES AND INFORM CINGULAR 24–HOURS IN ADVANCE. ALL TICKETS AND INSPECTION VERIFICATIONS WILL BE SUBMITTED TO THE OWNER'S REPRESENTATIVE WITHIN 24–HOURS AFTER THE INSPECTION HAS TAKEN PLACE.

10. ALL EQUIPMENT, WIRING, AND MATERIALS MUST HAVE A UL LABEL

11. ALL WORK SHALL BE DONE BY QUALIFIED AND EXPERIENCED JOURNEYMEN AND PERFORMED IN A WORKMANLIKE MANNER AND SHALL PROCEED IN AN ORDERLY MANNER SO AS NOT TO HOLD UP THE PROGRESS OF THE PROJECT.

12. THOROUGHLY TEST ALL LINES FEEDERS, EQUIPMENT, AND DEVICES WITH MAXIMUM LOADS TO ASSURE PROPER OPERATION

13. CONDUCTOR LENGTHS SHALL BE CONTINUOUS FROM TERMINATION TO TERMINATION WITHOUT SPLICES

14. PROVIDE PULL BOXES WHERE SHOWN AND/OR WHERE REQUIRED BY CODES AND/OR UTILITY COMPANIES.

15. ALL CONDUIT ROUGH IN SHALL BE COORDINATED WITH THE MECHANICAL EQUIPMENT TO AVOID LOCATION CONFLICTS CONTRACTOR SHALL VERIFY ALL LOCATIONS

16. ALL WIRES SHALL BE TAGGED AT ALL PULL BOXES, J–BOXES, EQUIPMENT BOXES, AND CABINETS WITH APPROVED PLASTIC TAGS.

17. ALL BREAKERS IN PANEL BOXES SHALL BE IDENTIFIED WITH TYPE WRITTEN LABELS NEATLY PLACED ALONG SIDE OF THE BREAKER.

18. ALL FIRE RATED WALL AND FLOOR PENETRATIONS ARE TO BE CAULKED AND SEALED WITH A FIRE RESISTANT CAULKING TO MAINTAIN THE INTEGRITY OF THE FIRE SEPARATION.

19. UTILIZE SONNEBORN TYPE NP–1 CAULKING FOR SEALING ALL EXTERIOR WALL PENETRATIONS

ELECTRICAL SPECIFICATIONS | 3

NOT USED | 4

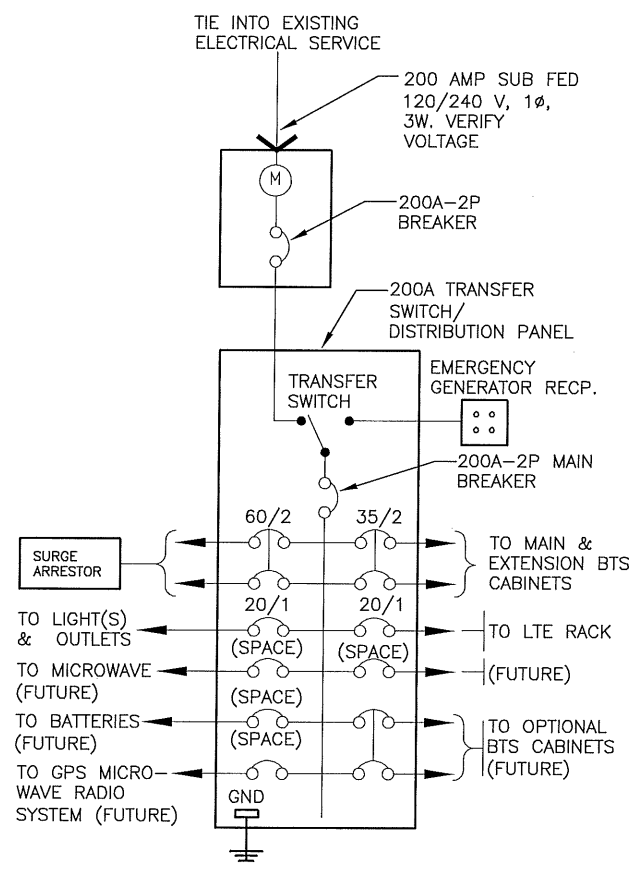

ONE LINE DIAGRAM | 2

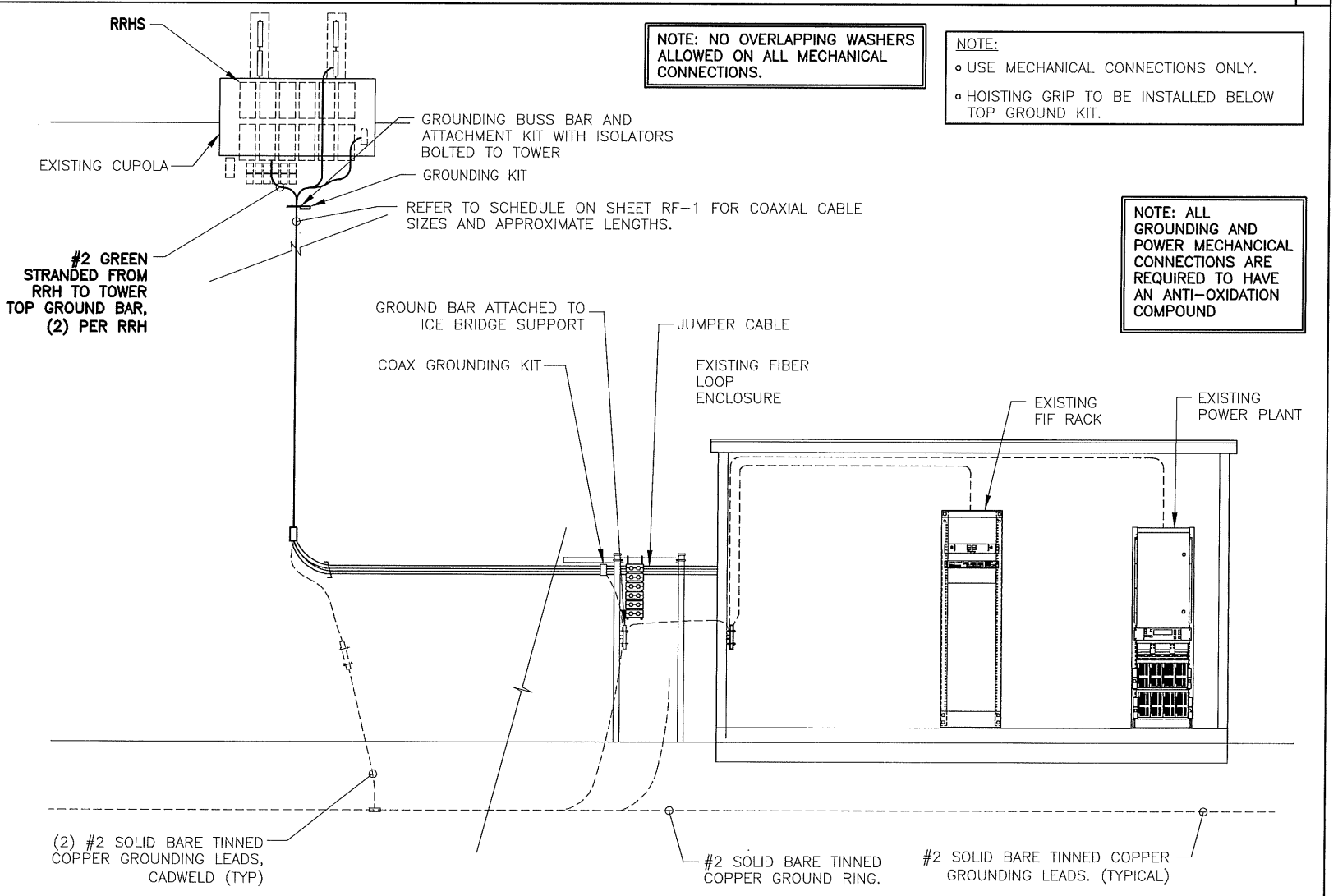

TOWER GROUNDING SCHEMATIC DIAGRAM | 1

PRELIMINARY NOT FOR CONSTRUCTION

IT IS A VIOLATION OF LAW FOR ANY PERSON UNLESS THEY ARE ACTING UNDER THE DIRECTION OF A LICENSED PROFESSIONAL ENGINEER TO ALTER THIS DOCUMENT, UNLESS EXPLICITLY AGREED TO BY THE ENGINEER IN WRITING. THE ENGINEER DISCLAIMS ALL LIABILITY ASSOCIATED WITH THE REUSE, ALTERATION OR MODIFICATION OF THE CONTENTS HEREIN.

velocitel® complete wireless solutions
1701 AMERICAN BLVD EAST
SUITE #16
BLOOMINGTON, MN 55425
952-944-1858 (MAIN)
952-944-1506 (FAX)

at&t MOBILITY
901 MARQUETTE AVE.
3RD FLOOR
MINNEAPOLIS, MN 55402

MNL01417
SHOREVIEW
FA# 10116081
3900 BETHEL DRIVE
ARDEN HILLS, MN 55112

NO	DATE	REVISIONS	BY	CHK	APP'D
B	11/05/15	REVISED PER COMMENTS	YS	MZ	–
A	10/05/15	ISSUED FOR REVIEW	YS	MZ	–

SCALE: DESIGNED: CHECKED:

GROUNDING AND ELECTRICAL DETAILS

FA #	DRAWING NUMBER	REV
10116081	E3	B

PROJECT DESCRIPTION:

MAINTENANCE DRAWINGS FOR A ROOFTOP CUPOLA

SITE NAME:

SHOREVIEW

SITE NUMBER:

100807-A

SITE ADDRESS:

3900 BETHEL DRIVE
SAINT PAUL, MN 55112

COORDINATES:

LAT: 45.0587°
LONG: -93.1623°

PROJECT CONTACTS	
PROJECT CONTRACTOR NAME	MARK HENNEK
PROJECT CONTRACTOR EMAIL ADDRESS	MARK.HENNEK@FDHVELOCITEL.COM
PROJECT CONTRACTOR ENGINEER PHONE NUMBER	(612) 701-8815
FDH VELOCITEL PROJECT ENGINEER NAME	**MICHAEL BRENNAN, EI**
FDH VELOCITEL PROJECT ENGINEER EMAIL ADDRESS	**MICHAEL.BRENNAN@FDHVELOCITEL.COM**
FDH VELOCITEL PROJECT ENGINEER PHONE NUMBER	**(314) 773-4000**

STRUCTURAL ASSESSMENT	
COMPANY	FDH VELOCITEL
PROJECT NO.	15CCSP2400
DATE	NOVEMBER 04, 2015

THIS REPORT WAS BASED ON A SPECIFIC ANTENNA AND COAX CONFIGURATION PROVIDED BY THE TOWER OWNER. ANY CHANGE TO THIS INFORMATION MUST BE REVIEWED BY FDH VELOCITEL.

ALL CONSTRUCTION SHALL COMPLY WITH THE TIA-1019-A STANDARD

SHEET INDEX

SHEET	DESCRIPTION	REV.
T-1	TITLE SHEET	0
N-1	MODIFICATION INSPECTION CHECKLIST	0
N-2	GENERAL NOTES	0
S-1	MODIFICATION SCHEDULE & MOUNT PIPE EXTENSION INSTALLATION DETAILS	0

PREPARED BY:

FDH VELOCITEL
ENGINEERING INNOVATION
VELOCITEL, INC., d.b.a. FDH VELOCITEL
6521 MERIDIEN DRIVE RALEIGH, NC 27616
PHONE: 919-755-1012 FAX: 919-755-1031

PREPARED FOR:

velocitel
complete wireless solutions
4164 INNSLAKE DRIVE, SUITE B
GLEN ALLEN, VA 23060
(804) 217-7088

PROFESSIONAL ENGINEER
I hereby certify that this plan, specification, or report was prepared by me or under my direct supervision and that I am a duly Licensed Professional Engineer under the laws of the State of Minnesota.
Print Name: Dennis D. Abel
Signature:
Date 11-13-2015 License # 41120

11/13/15
DENNIS D. ABEL, PE
MINNESOTA LIC. NO. 41120

DRAWN BY:	WJD
CHECKED BY:	MTB
ENG APPV'D:	DDA

SUBMITTALS		
DATE	DESCRIPTION	REV
11/13/15	CONSTRUCTION	0

THE INFORMATION CONTAINED IN THIS SET OF DOCUMENTS IS PROPRIETARY BY NATURE. REPRODUCTION OR CAUSING TO BE REPRODUCED THE WHOLE OR ANY PART OF THESE DRAWINGS WITHOUT THE PERMISSION OF FDH VELOCITEL IS PROHIBITED.

FDH PROJECT NUMBER:

15CCQF2400

SITE NAME:

SHOREVIEW

SITE NUMBER:

100807-A

SITE ADDRESS:

3900 BETHEL DRIVE
SAINT PAUL, MN 55112

SHEET TITLE

TITLE SHEET

SHEET NUMBER

T-1

MODIFICATION INSPECTION NOTES:

MI CHECKLIST

INSPECTIONS AND TESTING REQUIRED	REPORT ITEM
PRE-CONSTRUCTION	
X	MI CHECKLIST DRAWING
N/A	EOR APPROVED SHOP DRAWINGS
X	FABRICATION INSPECTION
N/A	FABRICATOR CERTIFIED WELD INSPECTION
X	MATERIAL TEST REPORT (MTR)
N/A	FABRICATOR NDE INSPECTION
N/A	NDE REPORT OF MONOPOLE BASE PLATE
X	PACKING SLIPS
ADDITIONAL TESTING AND INSPECTIONS:	
CONSTRUCTION	
X	CONSTRUCTION INSPECTIONS
N/A	FOUNDATION INSPECTIONS
N/A	CONCRETE COMPRESSIVE STRENGTH AND SLUMP TESTS
N/A	POST INSTALLED ANCHOR ROD VERIFICATION
N/A	BASE PLATE GROUT VERIFICATION
X	CONTRACTOR'S CERTIFIED WELD INSPECTION
N/A	EARTHWORK: LIFT AND DENSITY
X	ON SITE COLD GALVANIZATIONS
N/A	GUY WIRE TENSION REPORT
X	GC AS BUILT DOCUMENTS
ADDITIONAL TESTING AND INSPECTIONS:	
POST-CONSTRUCTION	
X	MI INSPECTOR REDLINE OR RECORD DRAWING(S)
N/A	POST INSTALLED ANCHOR ROD PULL-OUT TESTING
X	PHOTOGRAPHS
ADDITIONAL TESTING AND INSPECTIONS:	

NOTE: X DENOTES A DOCUMENT NEEDED FOR THE PMI REPORT
N/A DENOTES A DOCUMENT THAT IS NOT REQUIRED FOR THE PMI REPORT

GENERAL:

1. THE POST CONSTRUCTION INSPECTION (MI) IS A VISUAL INSPECTION OF TOWER MODIFICATIONS AND A REVIEW OF CONSTRUCTION INSPECTIONS AND OTHER REPORTS TO ENSURE THE INSTALLATION WAS CONSTRUCTED IN ACCORDANCE WITH THE CONTRACT DOCUMENTS, NAMELY THE MODIFICATION DRAWINGS, AS DESIGNED BY THE ENGINEER OF RECORD (EOR).
2. THE MI IS TO CONFIRM INSTALLATION CONFIGURATION AND WORKMANSHIP ONLY AND IS NOT A REVIEW OF THE MODIFICATION DESIGN ITSELF, NOR DOES THE MI INSPECTOR TAKE OWNERSHIP OF THE MODIFICATION DESIGN. OWNERSHIP OF THE STRUCTURAL MODIFICATION DESIGN EFFECTIVENESS AND INTEGRITY RESIDES WITH THE EOR AT ALL TIMES.
3. ALL MI'S SHALL BE CONDUCTED BY A MI INSPECTOR THAT IS APPROVED TO PERFORM ELEVATED WORK FOR FDH VELOCITEL.
4. TO ENSURE THAT THE REQUIREMENTS OF THE MI ARE MET, IT IS VITAL THAT THE GENERAL CONTRACTOR (GC) AND THE MI INSPECTOR BEGIN COMMUNICATING AND COORDINATING AS SOON AS A PO IS RECEIVED. IT IS EXPECTED THAT EACH PARTY WILL BE PROACTIVE IN REACHING OUT TO THE OTHER PARTY. IF CONTACT INFORMATION IS NOT KNOWN, CONTACT YOUR FDH VELOCITEL POINT OF CONTACT (POC).
5. REFER TO CCR-01 : CONTRACTOR CLOSEOUT REQUIREMENTS FOR FURTHER DETAILS AND REQUIREMENTS.

MI INSPECTOR:

1. THE MI INSPECTOR IS REQUIRED TO CONTACT THE GC AS SOON AS RECEIVING A PO FOR THE MI TO, AT A MINIMUM:
   - REVIEW THE REQUIREMENTS OF THE MI CHECKLIST
   - WORK WITH THE GC TO DEVELOP A SCHEDULE TO CONDUCT ON-SITE INSPECTIONS, INCLUDING FOUNDATION INSPECTIONS
2. THE PCI INSPECTOR IS RESPONSIBLE FOR COLLECTING ALL GENERAL CONTRACTOR (GC) INSPECTION AND TEST REPORTS, REVIEWING THE DOCUMENTS FOR ADHERENCE TO THE CONTRACT DOCUMENTS, CONDUCTING THE IN-FIELD INSPECTIONS, AND SUBMITTING THE MI REPORT TO FDH VELOCITEL.

CORRECTION OF FAILING MI's:

1. IF THE MODIFICATION INSTALLATION WOULD FAIL THE MI ("FAILED MI"), THE GC SHALL WORK WITH FDH VELOCITEL TO COORDINATE A REMEDIATION PLAN IN ONE OF TWO WAYS:
   - CORRECT FAILING ISSUES TO COMPLY WITH THE SPECIFICATIONS CONTAINED IN THE ORIGINAL CONTRACT DOCUMENTS AND COORDINATE A SUPPLEMENT MI.
   - OR, WITH FDH VELOCITEL'S APPROVAL, THE GC MAY WORK WITH THE EOR TO RE-ANALYZE THE MODIFICATION/REINFORCEMENT USING THE AS-BUILT CONDITION.

REQUIRED PHOTOS:

1. BETWEEN THE GC AND THE MI INSPECTOR THE FOLLOWING PHOTOGRAPHS, AT A MINIMUM, ARE TO BE TAKEN AND INCLUDED IN THE MI REPORT:
   - PRE-CONSTRUCTION GENERAL SITE CONDITION
   - PHOTOGRAPHS DURING THE REINFORCEMENT MODIFICATION CONSTRUCTION/ERECTION AND INSPECTION
     - RAW MATERIALS
     - PHOTOS OF ALL CRITICAL DETAILS
     - FOUNDATION MODIFICATIONS
     - WELD PREPARATION
     - BOLT INSTALLATION AND TORQUE
     - FINAL INSTALLED CONDITION
     - SURFACE COATING REPAIR
   - POST CONSTRUCTION PHOTOGRAPHS
     - FINAL INFIELD CONDITION
2. PHOTOS OF ELEVATED MODIFICATIONS TAKEN FROM THE GROUND SHALL BE CONSIDERED INADEQUATE.

PREPARED BY:

FDH VELOCITEL
ENGINEERING INNOVATION
VELOCITEL, INC., d.b.a. FDH VELOCITEL
6521 MERIDIEN DRIVE RALEIGH, NC 27616
PHONE: 919-755-1012 FAX: 919-755-1031

PREPARED FOR:

velocitel
complete wireless solutions
4164 INNSLAKE DRIVE, SUITE B
GLEN ALLEN, VA 23060
(804) 217-7088

PROFESSIONAL ENGINEER
I hereby certify that this plan, specification, or report was prepared by me or under my direct supervision and that I am a duly Licensed Professional Engineer under the laws of the State of Minnesota.
Print Name: Dennis D. Abel
Signature:
Date 11-13-2015 License # 41120

11/13/15
DENNIS D. ABEL, PE
MINNESOTA LIC. NO. 41120

DRAWN BY:	WJD
CHECKED BY:	MTB
ENG APPV'D:	DDA

SUBMITTALS		
DATE	DESCRIPTION	REV
11/13/15	CONSTRUCTION	0

THE INFORMATION CONTAINED IN THIS SET OF DOCUMENTS IS PROPRIETARY BY NATURE. REPRODUCTION OR CAUSING TO BE REPRODUCED THE WHOLE OR ANY PART OF THESE DRAWINGS WITHOUT THE PERMISSION OF FDH VELOCITEL IS PROHIBITED.

FDH PROJECT NUMBER:
15CCQF2400

SITE NAME:
SHOREVIEW

SITE NUMBER:
100807-A

SITE ADDRESS:
3900 BETHEL DRIVE
SAINT PAUL, MN 55112

SHEET TITLE
MODIFICATION INSPECTION CHECKLIST

SHEET NUMBER
N-1

GENERAL NOTES:

1. ALL WORK SHALL BE DONE IN ACCORDANCE WITH ALL APPLICABLE FEDERAL, STATE AND LOCAL CODES AND ORDINANCES. IT IS THE CONTRACTOR'S RESPONSIBILITY TO OBTAIN ALL PERMITS NECESSARY TO COMPLETE THE PROJECT AND ABIDE BY ALL CONDITIONS AND REQUIREMENTS OF THE PERMITS.
2. THE CONTRACTOR SHALL BE RESPONSIBLE FOR VERIFICATION OF ALL DIMENSIONS, ELEVATIONS AND EXISTING CONDITIONS AT THE SITE BEFORE ORDERING ANY MATERIALS OR DOING ANY WORK. NO EXTRA CHARGE OR COMPENSATION SHALL BE ALLOWED DUE TO DIFFERENCE BETWEEN ACTUAL DIMENSIONS AND DIMENSIONS INDICATED ON THE CONSTRUCTION DRAWINGS. ANY SUCH DISCREPANCY IN DIMENSION WHICH MAY BE FOUND SHALL BE SUBMITTED TO FDH VELOCITEL FOR CONSIDERATION BEFORE THE CONTRACTOR PROCEEDS WITH THE WORK IN THE AFFECTED AREAS.
3. INCORRECTLY FABRICATED, DAMAGED, OTHERWISE MISFITTING, OR NON-CONFORMING MATERIALS AND CONDITIONS SHALL BE REPORTED TO FDH VELOCITEL PRIOR TO ANY REMEDIAL OR CORRECTIVE ACTION. ALL ACTIONS SHALL REQUIRE FDH VELOCITEL APPROVAL.
4. IT IS THE CONTRACTOR'S SOLE RESPONSIBILITY TO DETERMINE ERECTION PROCEDURE AND SEQUENCE TO ENSURE THE SAFETY OF THE STRUCTURE AND ITS COMPONENT PARTS DURING ERECTION AND/OR FIELD MODIFICATIONS. THIS INCLUDES, BUT IS NOT LIMITED TO, THE ADDITION OF TEMPORARY BRACING, GUYS OR TIE DOWNS THAT MAY BE NECESSARY. SUCH MATERIAL SHALL BE REMOVED AFTER THE COMPLETION OF THE PROJECT.
5. CONTRACTOR SHALL PROMPTLY REMOVE ANY & ALL DEBRIS FROM SITE AND RESTORE AS BEST AS POSSIBLE TO PRECONSTRUCTION CONDITION.

CONTRACTOR QUALIFICATION NOTES:

1. ALL REPAIRS SHALL BE PERFORMED BY A TOWER CONTRACTOR WITH A MINIMUM 5 YEARS EXPERIENCE IN TOWER ERECTION AND RETROFIT AND WITH WORKING KNOWLEDGE OF THE ANSI/TIA-222-G "STRUCTURAL STANDARD FOR ANTENNA SUPPORTING STRUCTURES AND ANTENNAS".
2. CONTRACTOR IS RESPONSIBLE FOR ALL CONSTRUCTION MEANS AND METHODS. SHOULD THE CONTRACTOR REQUIRE DIRECT CONSULTATION, FDH VELOCITEL IS WILLING TO OFFER SERVICES BASED UPON AN AGREED FEE FOR THE WORK REQUIRED.
3. ALL SUBMITTAL INFORMATION MUST BE SENT TO FDH VELOCITEL 6521 MERIDIEN DRIVE, RALEIGH NC, 27616, TEL. (919) 755-1012, FAX. (919) 755-1031, E-MAIL INFO@FDHVELOCITEL.COM. ANY VARIATION OF THESE SPECIFICATIONS OR DRAWINGS WITHOUT CONSENT FROM FDH VELOCITEL WILL VOID ANY RESPONSIBILITY OR LIABILITY FOR DAMAGE (MATERIAL OR PHYSICAL) TOWARDS FDH VELOCITEL
4. ALL CONSTRUCTION TO BE IN ACCORDANCE WITH THE TIA-1019-A STANDARD.

JOB SITE SAFETY & NOTES:

1. NEITHER THE PROFESSIONAL ACTIVITIES OF FDH VELOCITEL NOR THE PRESENCE OF FDH VELOCITEL OR EMPLOYEES AND SUB-CONSULTANTS AT THE CONSTRUCTION SITE, SHALL RELIEVE THE GENERAL CONTRACTOR AND OR SUBCONTRACTORS AND ANY OTHER ENTITY OF THEIR OBLIGATIONS, DUTIES AND RESPONSIBILITIES INCLUDING, BUT NOT LIMITED TO, CONSTRUCTION MEANS, METHODS, SEQUENCE, TECHNIQUES OR PROCEDURES NECESSARY FOR PERFORMING, SUPERINTENDING OR COORDINATING ALL PORTIONS OF THE WORK OF CONSTRUCTION IN ACCORDANCE WITH THE CONTRACT DOCUMENTS AND ANY HEALTH OR SAFETY PRECAUTIONS REQUIRED BY ANY REGULATORY AGENCIES. THE GENERAL CONTRACTOR AND OR SUBCONTRACTOR IS SOLELY RESPONSIBLE FOR JOB SAFETY, AND WARRANTS THAT THIS INTENT IS EVIDENT BY ACCEPTING THIS WORK.

STEEL:

1. ALL STRUCTURAL STEEL SHALL BE FABRICATED AND ERECTED IN ACCORDANCE WITH THE LATEST AISC CODE AND ASTM SPECIFICATIONS.
2. ALL CONNECTIONS OF STRUCTURAL STEEL MEMBERS SHALL BE MADE USING SPECIFIED WELDS WITH WELDING ELECTRODES E-70XX OR SPECIFIED HIGH STRENGTH BOLTS TO BE ASTM A325N, THREAD INCLUDED WITH SHEAR PLANE (UNLESS OTHERWISE NOTED).
3. ALL BOLTED CONNECTIONS TO BE INSTALLED TO A SNUG-TIGHTENED CONDITION IN ACCORDANCE WITH AISC 13 PART 16.2, "SPECIFICATION FOR STRUCTURAL JOINTS USING ASTM A325 OR A490 BOLTS", SECTION 8.1, UNLESS OTHERWISE SPECIFIED. WHEN "X" TYPE BOLTS ARE USED, CONTRACTOR MAY BE REQUIRED TO STACK ADDITIONAL WASHERS TO OBTAIN PROPER SNUG TIGHT INSTALLATION. ALL NUTS SHALL BE HEAVY HEX UNLESS OTHERWISE NOTED.
4. ALL STEEL, AFTER FABRICATION, SHALL BE HOT DIPPED GALVANIZED PER ASTM A-123. ALL DAMAGED SURFACES, WELDED AREAS AND AUTHORIZED NON-GALVANIZED MEMBERS OR PARTS (EXISTING OR NEW) SHALL BE PAINTED WITH MULTIPLE COATS OF ZRC COLD GALVANIZING COMPOUND ACHEIVING A MINIMUM OF 4 MILS DRY FILM PER ASTM A 780.
5. ALL SHOP AND FIELD WELDING SHALL BE DONE BY WELDERS QUALIFIED AS DESCRIBED IN THE "AMERICAN WELDING SOCIETY'S STANDARD QUALIFICATION PROCEDURE" TO PERFORM THE TYPE OF WORK REQUIRED. CONTRACTOR IS REQUIRED TO PROVIDE FDH VELOCITEL WITH A PASSING CERTIFIED WELDING INSPECTION FOR ALL WELDS.
6. STRUCTURAL STEEL MAY NOT BE TORCH CUT FOR FABRICATION. ALL STEEL FABRICATION MUST FOLLOW AISC STANDARDS.

MISC. NOTES:

1. ALL MODIFICATIONS ARE ASSUMED TO BE MADE ON AN EMPTY TOWER. CONTRACTOR IS RESPONSIBLE TO MAKE PROVISIONS TO SUPPORT OR WORK AROUND EXISTING ANTENNAS AND TRANSMISSION LINES. MODIFICATIONS MUST BE CONTINUOUS THROUGH ALL AREAS SHOWN.
2. CONTRACTOR FIELD VERIFY ALL DIMENSIONS PRIOR TO CONSTRUCTION.

FABRICATION NOTES:

1. ALL DIMENSIONS ARE PRELIMINARY UNTIL FIELD VERIFIED BY CONTRACTOR. ANY CHANGES MUST BE APPROVED BY ENGINEER OF RECORD IN WRITING PRIOR TO FABRICATION AND INSTALLATION.
2. NEW STEEL MEMBERS MUST HAVE SINGLE DRILLED HOLES. SLOTTED AND DOUBLE DRILLED HOLES ARE NOT ACCEPTABLE MEANS OF FABRICATION.

SUBSTITUTES AND/OR EQUALS:

1. IF CONTRACTOR WISHES TO FURNISH OR USE A SUBSTITUTE ITEM OF MATERIAL OR EQUIPMENT, CONTRACTOR SHALL FIRST MAKE WRITTEN APPLICATION TO ENGINEER OF RECORD FOR ACCEPTANCE THEREOF, CERTIFYING THAT THE PROPOSED SUBSTITUTE WILL PERFORM ADEQUATELY THE FUNCTIONS AND ACHIEVE THE RESULTS CALLED FOR BY THE GENERAL DESIGN, BE SIMILAR IN SUBSTANCE TO THAT SPECIFIED AND SUITED TO THE SAME USE AS THAT SPECIFIED. ALL VARIATIONS OF THE PROPOSED SUBSTITUTE FROM THAT SPECIFIED WILL BE IDENTIFIED IN THE APPLICATION AND AVAILABLE MAINTENANCE, REPAIR AND REPLACEMENT SERVICE WILL BE INDICATED. THE APPLICATION WILL ALSO CONTAIN AN ITEMIZED ESTIMATE OF ALL COSTS OR CREDITS THAT WILL RESULT DIRECTLY OR INDIRECTLY FROM ACCEPTANCE OF SUCH SUBSTITUTE INCLUDING COSTS OF REDESIGN AND CLAIMS OF OTHER CONTRACTORS AFFECTED BY THE RESULTING CHANGE, ALL OF WHICH WILL BE CONSIDERED BY ENGINEER OF RECORD IN EVALUATION OF THE PROPOSED SUBSTITUTE. ENGINEER OF RECORD MAY REQUIRE CONTRACTOR TO FURNISH ADDITIONAL DATA ABOUT THE PROPOSED SUBSTITUTE.

COLD GALVANIZATION/SURFACE PREPARATION NOTES:

1. CONTRACTOR TO USE ZINGA OR ZRC COLD GALVANIZATION COMPOUNDS OR APPROVED EQUIVALENT.
2. PREPARE RUSTED/CORRODED SURFACE FOR TREATMENT ACCORDING TO MANUFACTURER'S RECOMMENDATIONS.
3. CONTRACTOR TO APPLY (2) COATS OF COLD GALVANIZATION COMPOUND PER MANUFACTURER'S RECOMMENDATION. DRYING AND CURING TIMES MUST BE UTILIZED PER MANUFACTURER'S RECOMMENDATION.
4. APPLY ALL COATINGS BY BRUSH IN CALM WIND CONDITIONS. THE USE OF AEROSOL IS NOT PERMITTED.
5. IF THE TOWER IS PAINTED, BRUSH PAINT ALL TREATED AREAS TO MATCH TOWER AFTER COLD GALVANIZATION COMPOUND IS ALLOWED TO CURE.

SURFACE PREPARATION:

1. PREPARE SURFACE TO BE WELDED BY REMOVING PAINT OR GALVANIZATION TO BARE METAL USING POWER WIRE BRUSHING IN ACCORDANCE WITH SSPC-SP11, (STEEL STRUCTURES PAINTING COUNCIL). FOLLOWING POWER WIRE BRUSHING CONTRACTOR SHALL POLISH METAL SURFACE WITH HIGH SPEED GRINDER WITH 400+ GRIT SANDPAPER.
2. AFTER NEW STEEL INSTALLATION CONTRACTOR TO BRUSH PAINT (2) COATS OF ZRC OR ZINGA COLD GALVANIZATION COMPOUND PER MANUFACTURER'S SPECIFICATIONS.

WELDING NOTES:

1. ALL WELDING TO THE EXISTING TOWER SHALL BE PERFORMED BY CERTIFIED WELDERS UTILIZING PROCEDURES QUALIFIED IN ACCORDANCE WITH AWS D1.1 AND AWS C5.4.
2. CONTRACTOR SHALL COMPLY WITH AWS D1.1 FOR PROCEDURES, APPEARANCE AND QUALITY OF WELDS AND FOR METHODS USED IN CORRECTING WELDING. ALL WELDERS AND WELDING PROCESSES SHALL BE QUALIFIED IN ACCORDANCE WITH AWS "STANDARD QUALIFICATION PROCEDURES". CONTRACTOR SHALL SUBMIT CERTIFICATION OF WELDERS TO THE ENGINEER PRIOR TO COMMENCEMENT OF THE WORK.
3. CONTRACTOR RESPONSIBLE FOR TEMPORARY HEAT SHIELDING AS REQUIRED DURING WELDING.
4. CONTRACTOR RESPONSIBLE FOR VIEWING EXISTING TOWER FOR LOOSE AND FLAMMABLE MATERIAL PRIOR TO WELDING FLAT PLATE.
5. ALL WELDS TO BE VISUALLY INSPECTED BY A CERTIFIED WELD INSPECTOR PER AWS D1.1.

STEEL GRADE SCHEDULE

SCOPE	SHAPE	GRADE	YIELD STRENGTH (F_y)	ULTIMATE STRENGTH (F_u)
ALL	PIPE	A53 GR. B	35 KSI	60 KSI

PREPARED BY:

FDH VELOCITEL
ENGINEERING INNOVATION
VELOCITEL, INC., d.b.a. FDH VELOCITEL
6521 MERIDIEN DRIVE RALEIGH, NC 27616
PHONE: 919-755-1012 FAX: 919-755-1031

PREPARED FOR:

velocitel
complete wireless solutions
4164 INNSLAKE DRIVE, SUITE B
GLEN ALLEN, VA 23060
(804) 217-7088

PROFESSIONAL ENGINEER
I hereby certify that this plan, specification, or report was prepared by me or under my direct supervision and that I am a duly Licensed Professional Engineer under the laws of the State of Minnesota.
Print Name: Dennis D. Abel
Signature:
Date 11-13-2015 License # 41120

11/13/15
DENNIS D. ABEL, PE
MINNESOTA LIC. NO. 41120

DRAWN BY:	WJD
CHECKED BY:	MTB
ENG APPV'D:	DDA

SUBMITTALS

DATE	DESCRIPTION	REV
11/13/15	CONSTRUCTION	0

THE INFORMATION CONTAINED IN THIS SET OF DOCUMENTS IS PROPRIETARY BY NATURE. REPRODUCTION OR CAUSING TO BE REPRODUCED THE WHOLE OR ANY PART OF THESE DRAWINGS WITHOUT THE PERMISSION OF FDH VELOCITEL IS PROHIBITED.

FDH PROJECT NUMBER:
15CCQF2400

SITE NAME:
SHOREVIEW

SITE NUMBER:
100807-A

SITE ADDRESS:
3900 BETHEL DRIVE
SAINT PAUL, MN 55112

SHEET TITLE
GENERAL NOTES

SHEET NUMBER
N-2

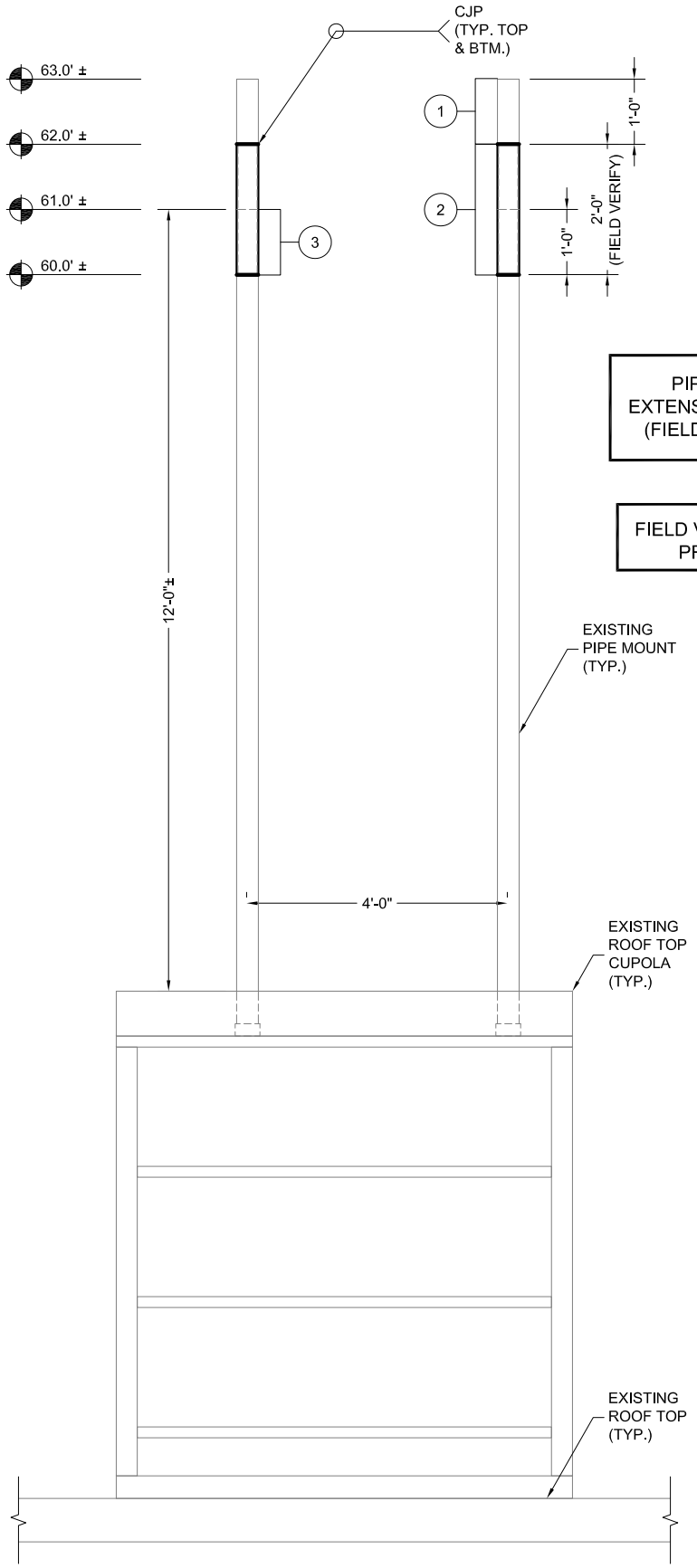

PIPE TO BE USED FOR MOUNT PIPE EXTENSION SHALL BE P3.5 (4" X0.226") X 2'-0" (FIELD VERIFY TO MATCH EXISTING PIPE)

FIELD VERIFY LENGTH OF NEW PIPE TO FIT PROPOSED STEALTH CANNISTER.

TOP 12" OF EXISTING MOUNT PIPE (WITH BULKHEAD) TO BE REMOVED AND REINSTALLED ON TOP OF EXTENSION.

MOUNT PIPE EXTENSION LAYOUT
ELEVATION VIEW

1 / S-1 ELEVATION
SCALE: NTS

TOWER MODIFICATION SCHEDULE

NO.	TYPE OF MODIFICATION	BTM. ELEV.	TOP ELEV.	SHEET
1	INSTALLATION OF EXISTING 12" OF REMOVED PIPE MOUNTS.	62.0±	63.0±	S-1
2	INSTALLATION OF NEW MOUNT PIPE EXTENSIONS. [1]	60.0±	62.0±	S-1
3	REMOVAL OF TOP 12" OF EXISTING PIPE MOUNT.	60.0±	61.0±	S-1

[1] (2) TOTAL PIPE MOUNTS TO BE EXTENDED.

- APPURTENANCES MAY INTERFERE WITH PROPOSED MODIFICATIONS.
- ALL MODIFICATIONS TO BE INSTALLED CONTINUOUSLY THROUGH EXISTING EQUIPMENT. ALL EXISTING EQUIPMENT NOT TO BE DAMAGED OR TAKEN OFF AIR DURING INSTALLATION.
- ANTENNA & COAX GRAPHICS NOT SHOWN FOR CLARITY. SEE STRUCTURAL ANALYSIS REPORT FOR EXISTING ANTENNA LOADING & COAX CONFIGURATION.

PREPARED BY:
FDH VELOCITEL
ENGINEERING INNOVATION
VELOCITEL, INC., d.b.a. FDH VELOCITEL
6521 MERIDIEN DRIVE RALEIGH, NC 27616
PHONE: 919-755-1012 FAX: 919-755-1031

PREPARED FOR:
velocitel
complete wireless solutions
4164 INNSLAKE DRIVE, SUITE B
GLEN ALLEN, VA 23060
(804) 217-7088

PROFESSIONAL ENGINEER
I hereby certify that this plan, specification, or report was prepared by me or under my direct supervision and that I am a duly Licensed Professional Engineer under the laws of the State of Minnesota.
Print Name: Dennis D. Abel
Signature:
Date 11-13-2015 License # 41120

11/13/15
DENNIS D. ABEL, PE
MINNESOTA LIC. NO. 41120

DRAWN BY:	WJD
CHECKED BY:	MTB
ENG APPV'D:	DDA

SUBMITTALS

DATE	DESCRIPTION	REV
11/13/15	CONSTRUCTION	0

THE INFORMATION CONTAINED IN THIS SET OF DOCUMENTS IS PROPRIETARY BY NATURE. REPRODUCTION OR CAUSING TO BE REPRODUCED THE WHOLE OR ANY PART OF THESE DRAWINGS WITHOUT THE PERMISSION OF FDH VELOCITEL IS PROHIBITED.

FDH PROJECT NUMBER:
15CCQF2400

SITE NAME:
SHOREVIEW

SITE NUMBER:
100807-A

SITE ADDRESS:
3900 BETHEL DRIVE
SAINT PAUL, MN 55112

SHEET TITLE
MODIFICATION SCHEDULE & MOUNT PIPE EXTENSION INSTALLATION DETAILS

SHEET NUMBER
S-1

velocitel
complete wireless solutions

Attachment E

at&t

Shoreview - 10116081
Existing East View of Antenna Location

velocitel
complete wireless solutions

at&t

Shoreview - 10116081
Proposed East View of Antenna Location

Shoreview - 10116081
Existing North East View of Antenna Location

Shoreview - 10116081
Proposed North East View of Antenna Location

Shoreview - 10116081
Existing South East View of Antenna Location

Shoreview - 10116081
Proposed South East View of Antenna Location

Shoreview - 10116081
Existing West View of Antenna Location

Shoreview - 10116081
Proposed West View of Antenna Location

Attachment F

SHOREVIEW COVERAGE & CAPCITY

2C AND 3C LTE carriers add capacity to existing base layer 700 MHz

Existing 700 MHz coverage

Cell Site Location:

Shoreview
Lat. 45.0588 /Long -93.1623

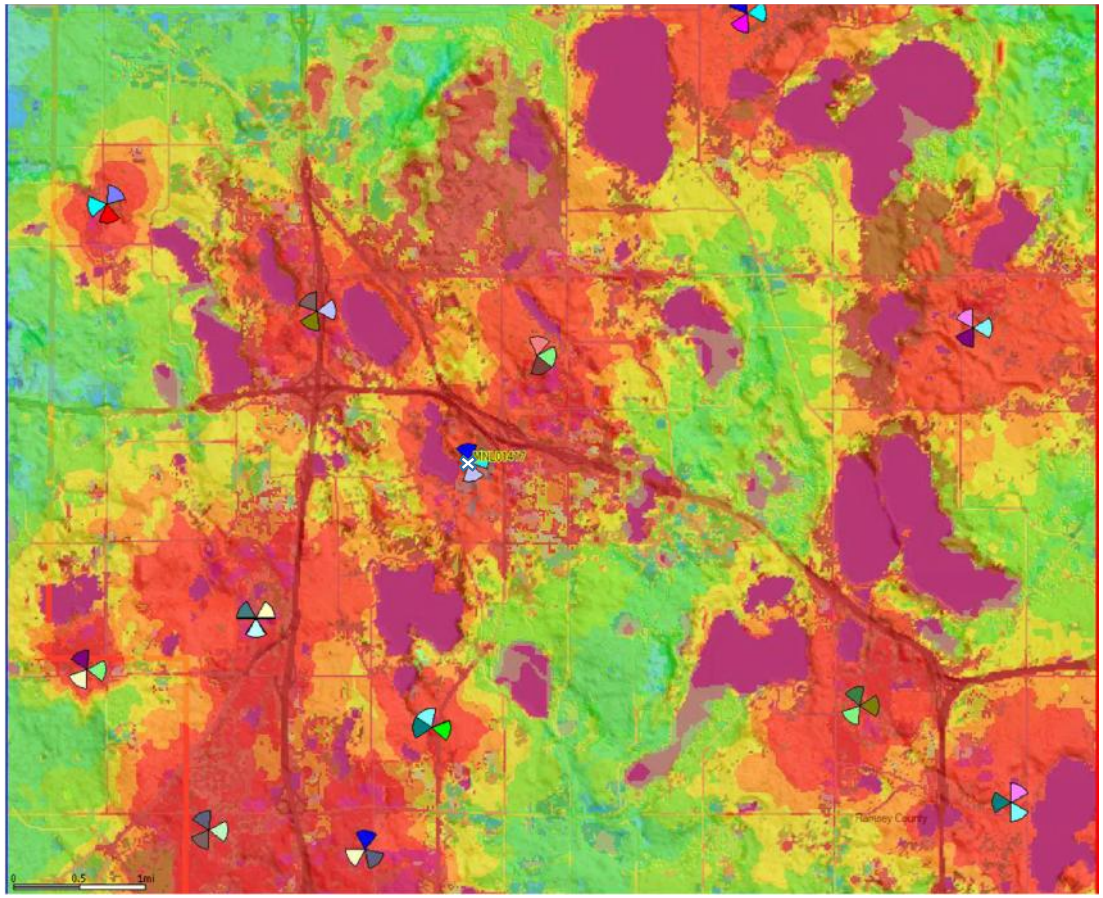

700 MHz is the Base layer and is primary coverage.

Shoreview LTE 700 EXISTING

- Best Signal Level (dBm) >=-70
- Best Signal Level (dBm) >=-75
- Best Signal Level (dBm) >=-80
- Best Signal Level (dBm) >=-85
- Best Signal Level (dBm) >=-90
- Best Signal Level (dBm) >=-95
- Best Signal Level (dBm) >=-100
- Best Signal Level (dBm) >=-105

Existing AWS 2100 MHz coverage

Cell Site Location:

Shoreview
Lat. 45.0588 /Long -93.1623

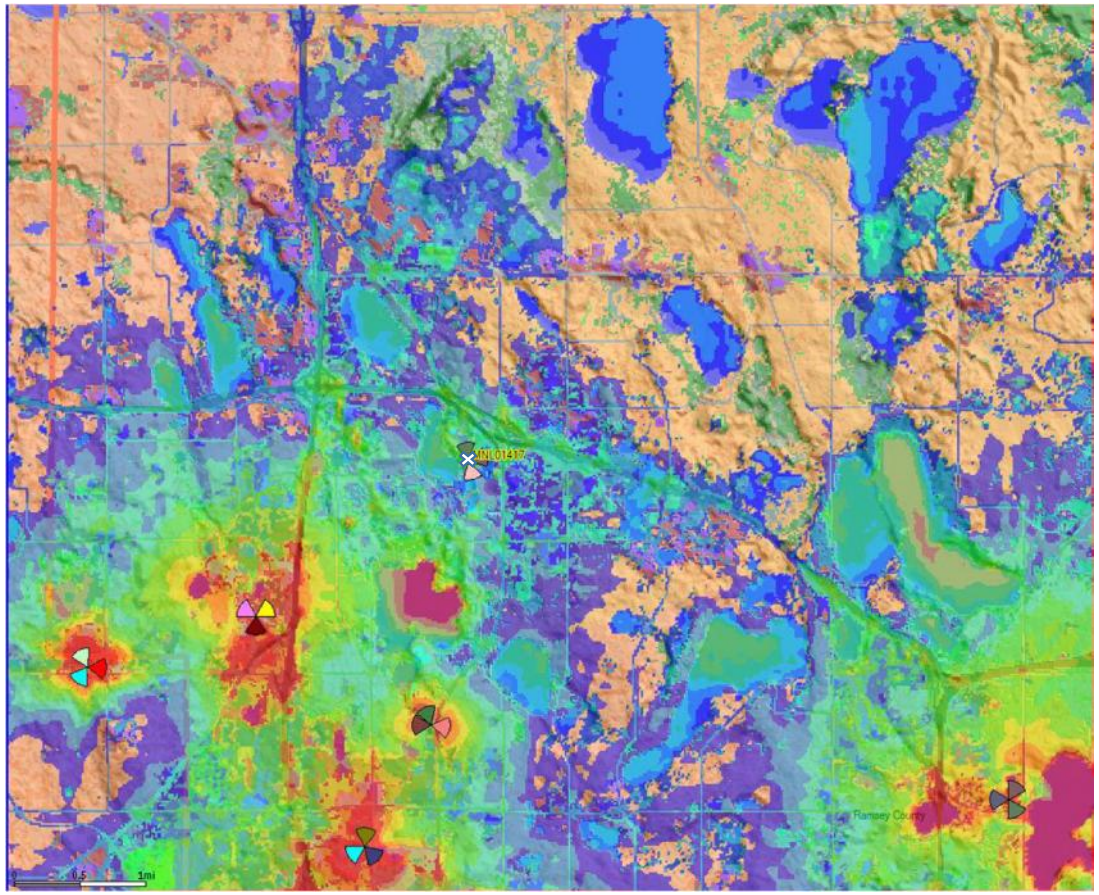

AWS is for offloading 700 MHz and providing additional Bandwidth for area. Has a smaller coverage footprint by nature.

Shoreview LTE AWS EXISTING

- Best Signal Level (dBm) >=-70
- Best Signal Level (dBm) >=-75
- Best Signal Level (dBm) >=-80
- Best Signal Level (dBm) >=-85
- Best Signal Level (dBm) >=-90
- Best Signal Level (dBm) >=-95
- Best Signal Level (dBm) >=-100
- Best Signal Level (dBm) >=-105

PROPOSED AWS & WCS: 2100 MHz & 2300 MHz Coverage

Cell Site Location:

Shoreview
Lat. 45.0588 /Long -93.1623

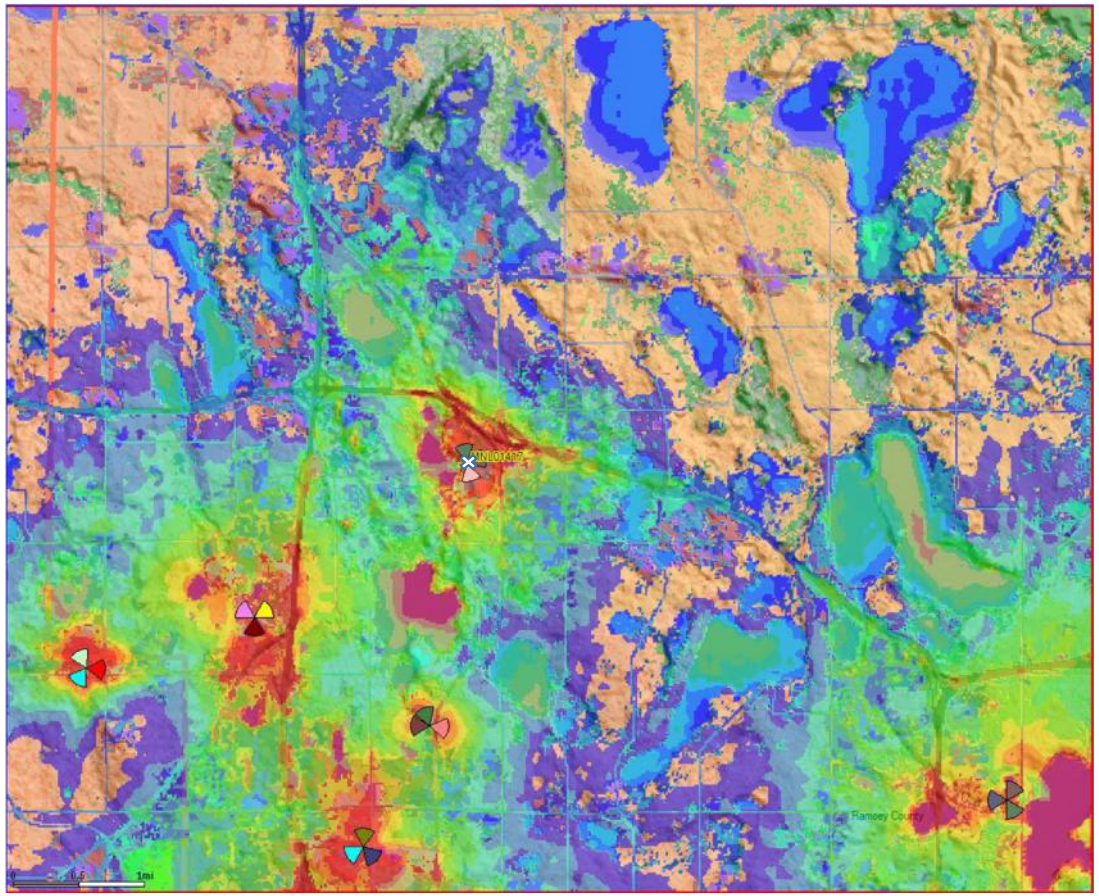

AWS & WCS are for offloading 700 MHz and providing additional Bandwidth for area. Has a smaller coverage footprint by nature.

Shoreview LTE AWS_WCS PROPOSED

- Best Signal Level (dBm) > = -70
- Best Signal Level (dBm) > = -75
- Best Signal Level (dBm) > = -80
- Best Signal Level (dBm) > = -85
- Best Signal Level (dBm) > = -90
- Best Signal Level (dBm) > = -95
- Best Signal Level (dBm) > = -100
- Best Signal Level (dBm) > = -105

Attachment G

ARDEN HILLS

MEMORANDUM

DATE: January 6, 2015 PC Agenda Item **3.A**

TO: Planning Commission

FROM: Matthew Bachler, Associate Planner

SUBJECT: **Planning Case #15-025 – Public Hearing Required**
Applicant: FDH Velocitel (on behalf of AT&T Mobility)
Property Address: 3900 Bethel Drive
Request: Conditional Use Permit Amendment

Requested Action

The applicant has requested a Conditional Use Permit Amendment in order to extend the height of the existing wireless antenna installation on Bethel University's campus at 3900 Bethel Drive.

Background

The City approved a Conditional Use Permit (CUP) in 2010 to allow AT&T Mobility to install roof-mounted cellular antennas on the Brushaber Commons building on Bethel University's campus and to construct a 160 square foot equipment shed adjacent to the building. The CUP approval was granted in Planning Case 10-010. The existing installation includes six wireless antennas that are housed in two 12-foot tall fiberglass canisters. The canisters are designed to have the appearance of smokestacks and are located on the roof to blend in with the existing mechanical equipment.

AT&T Mobility leases the space for their equipment from Bethel University. The City does not receive any lease payments as part of this agreement.

1. Overview of Request:

FDH Velocitel on behalf of AT&T Mobility has requested a CUP Amendment to upgrade the existing wireless antenna installation on the roof of the Brushaber Commons building on Bethel University's campus. The existing six antennas would be replaced with nine new antennas to improve the provider's service coverage and capacity in this area of the City. In order to accommodate the upgrade, the mounting poles the antennas are attached to would need be

extended by two feet for proper positioning and clearance between each antenna. The antenna assembly canisters would also be extended by two feet to a new height of 63 feet above ground level. All new antennas would continue to be housed in the canisters and entirely concealed.

The applicant has provided a project narrative explaining the upgrade and the need for this work (Attachment A). The complete plan set for the upgrade project is included in Attachment C and photographs showing existing and proposed conditions are included in Attachment D.

2. Surrounding Area:

Direction	Future Land Use Plan	Zoning	Existing Land Use
North	Right-of-Way, Low Density Residential	Right-of-Way, R-1 - Single Family Residential District	Right-of-Way, Single Family Residential
South	Railroad, Low Density Residential	Railroad, R-1- Single Family Residential District	Railroad, Single Family Residential
East	Right-of-Way, Light Industrial and Office, Mixed Business	Right-of-Way, I-Flex District	Right-of-Way, Office, Industrial
West	Low Density Residential, Park and Open Space	R-1 - Single Family Residential District, Parks and Open Space District	Single Family Residential, Parks and Open Space

3. Site Data:

Future Land Use Plan:	Public and Institutional
Existing Land Use:	Institutional
Zoning:	B-1 - Limited Business District (Main Campus) R-1 - Single Family Residential (Athletic Complex)
Size:	191.32 Acres (Including athletic complex, the main campus, and part of Lake Valentine)
Topography:	Rolling terrain

Plan Evaluation

1. Section 1320 – District Provisions

A. Allowable Uses (Section 1320.05)

The existing use of the property for a wireless antenna installation is a permitted conditional accessory use in the B-1 Limited Business District. The antennas are considered an accessory use to the principal higher education use on the property.

2. Section 1325 – General Regulations

A. Antennas, Dish Antennas, and Towers (Section 1325.09)

Height (Section 1325.09, Subd 5) – Meets Requirements

The Zoning Code states that no antenna shall be mounted at a height exceeding 75 feet. The proposed upgrade to the antenna installation would extend the two canisters housing the antennas to a height of 63 feet above ground level.

Location – (Section 1325.09, Subd 6) – Meets Requirements

The location of the existing antenna installation was approved by the City in Planning Case 10-010. The proposed upgrade would not relocate the existing antenna support structures. All new antennas would continue to be housed in the two antenna assembly canisters. The location of the antennas on the roof of the Brushaber Commons building is approximately 1,185 feet from the nearest property line. The roof of the building is not visible outside the Bethel University campus.

All other location requirements are met by this application.

Screening (Section 1325.09, Subd. 7) – Meets Requirements

The Zoning Code requires antennas to be painted to match the color of the structure to which they are attached. The antennas themselves will not be visible because they are located inside of the antenna assembly canisters. The canisters will be painted to blend in with existing mechanical equipment on the roof.

3. Section 1355.04 Subd 3 – Conditional Use Permit

Section 1355.04, Subd 3 of the Arden Hills Zoning Code lists the criteria for evaluating a Conditional Use Permit. The Planning Commission should consider the effect of the proposed use upon the health, safety, convenience and general welfare of the owners and occupants of the surrounding land, in particular, and the community as a whole, in general, including but not limited to the following factors:

1. Existing and anticipated traffic and parking conditions;
2. Noise, glare, odors, vibration, smoke, dust, air pollution, heat, liquid or solid waste, and other nuisance characteristics;
3. Drainage;
4. Population density;
5. Visual and land use compatibility with uses and structures on surrounding land; adjoining land values;

6. Park dedications where applicable; and the
7. Orderly development of the neighborhood and the City within the general purpose and intent of this ordinance and the Comprehensive Development Plan for the City.

Additional Review

City Building Official
The City Building Official has noted that a final inspection of the existing antenna installation will need to be completed prior to the issuance of any building permits. The proposed upgrade project will require a separate building permit application with the City.

Findings of Fact

The Planning Commission must make a finding as to whether or not the proposed application would adversely affect the surrounding neighborhood or the community as a whole based on the aforementioned factors. Staff offers the following findings of fact for consideration:

General Findings:

1. The applicant has requested a Conditional Use Permit Amendment in order extend the height of the existing wireless antenna installation at 3900 Bethel Drive, approved in Planning Case 10-010.
2. The property at 3900 Bethel Drive is located in the B-1 - Limited Business District.
3. Cellular towers and antennas are allowed as a conditional accessory use in the B-1 District.
4. The proposed upgrade would increase the number of antennas from six (6) to nine (9).
5. The Zoning Code states that no antenna shall be mounted at a height exceeding 75 feet.
6. The proposed upgrade would increase the height of the antenna assembly canisters that house the antennas to 63 feet above ground level.
7. The antennas would be located approximately 1,185 feet from the nearest property line.
8. The antennas would be concealed inside the antenna assembly canisters, which will be painted to blend in with existing mechanical equipment on the roof.

Conditional Use Permit Evaluation Criteria:

9. The proposed plan would not have any impact on traffic or parking conditions.
10. The proposed plan will not produce any permanent noise, glare, odors, vibration, smoke, dust, air pollution, heat, liquid or solid waste, and other nuisance characteristics.
11. The proposed plan will not impact drainage.
12. The proposed plan will not impact population density.
13. The proposed antenna assembly canisters will likely only be visible from locations on Bethel University's campus and they are not anticipated to have an impact on land use compatibility with uses and structures on surrounding land or adjoining land values.
14. Park dedications are not applicable.

15. The proposed plan does not conflict with the general purpose and intent of the Zoning Code or the Comprehensive Development Plan for the City.

Staff Recommendation

Based on the submitted plans and findings of fact, staff recommends approval of Planning Case 15-025 for a Conditional Use Permit Amendment at 3900 Bethel Drive. If the Planning Commission makes a recommendation of approval for this request, staff is recommending the following five (5) conditions be included with the approval:

1. The project shall be completed in accordance with the plans submitted as amended by the conditions of approval. Any significant changes to these plans, as determined by the City Planner, shall require review and approval by the Planning Commission and City Council.
2. A building permit shall be obtained for all proposed antennas and associated equipment prior to installation.
3. A final inspection of the existing antenna installation shall be completed by the City Building Official prior to the issuance of a building permit for the new antennas and associated equipment.
4. A Conditional Use Permit drafted by the City Attorney shall be signed by Bethel University prior to the issuance of any building permits.
5. The antenna assembly canisters shall be painted to blend in with the surrounding equipment on the roof to which they are attached.

Options

1. Recommend Approval with Conditions: Motion to recommend *approval* of Planning Case 15-025 for a Conditional Use Permit Amendment at 3900 Bethel Drive, based on the findings of fact and the submitted plans, as amended by the five (5) conditions in the January 6, 2016, Report to the Planning Commission.

2. Recommend Approval as Submitted: Motion to recommend *approval* of Planning Case 15-025 for a Conditional Use Permit Amendment at 3900 Bethel Drive, based on the findings of fact and the submitted plans in the January 6, 2016, Report to the Planning Commission.

3. Recommend Denial: Motion to recommend *denial* of Planning Case 15-025 for a Conditional Use Permit Amendment at 3900 Bethel Drive based on the following findings: *findings to deny should specifically reference the reasons for denial.*

4. Table: Motion to *table* Planning Case 15-025 for a Conditional Use Permit Amendment at 3900 Bethel Drive: *a specific reason and/or information request should be included with a motion to table.*

Notice

Notice was published in the *Arden Hills/Shoreview Bulletin* on December 16, 2015, and notice was prepared by the City and mailed to residents within five hundred (500) feet of the subject property.

Public Comments

At this time the City has not received any comments from the public regarding this project.

Deadline for Agency Action

The City of Arden Hills received the completed application for this request on November 23, 2015. Pursuant to Minnesota State Statute, the City is required to act on this request by January 22, 2016, (60 days), unless the City provides the petitioner with written reasons for an additional 60-day review period.

The applicant was notified on December 22, 2015 of the City's request for an additional 60-day review period. Pursuant to Minnesota State Statute, the City must now act on this request by March 22, 2016 (120 days). The City may, with the consent of the applicant, extend the review period beyond the initial 120 days.

Attachments

A. Land Use Application and Project Narrative
B. Site Map and Aerial Maps
C. Construction Drawings Plan Set
D. Photographs – Existing and Proposed Conditions

Attachment H

Approved:

CITY OF ARDEN HILLS, MINNESOTA
PLANNING COMMISSION
WEDNESDAY, JANUARY 6, 2016
6:30 P.M. - ARDEN HILLS CITY HALL

DRAFT

PLANNING CASES

A. Planning Case 15-025; CUP Amendment – Antenna Extension – AT&T Wireless – *Public Hearing*

Senior Planner Bachler stated that the City approved a Conditional Use Permit (CUP) in 2010 to allow AT&T Mobility to install roof-mounted cellular antennas on the Brushaber Commons building on Bethel University's campus and to construct a 160 square foot equipment shed adjacent to the building. The CUP approval was granted in Planning Case 10-010. The existing installation includes six wireless antennas that are housed in two 12-foot tall fiberglass canisters. The canisters are designed to have the appearance of smokestacks and are located on the roof to blend in with the existing mechanical equipment.

Senior Planner Bachler explained that FDH Velocitel, on behalf of AT&T Mobility, has requested a CUP Amendment to upgrade the existing wireless antenna installation on the roof of the Brushaber Commons building. The existing six antennas would be replaced with nine new antennas to improve the provider's service coverage and capacity in this area of the City. In order to accommodate the upgrade, the mounting poles the antennas are attached to would need to be extended by two feet for proper positioning and clearance between each antenna. The antenna assembly canisters would also be extended by two feet to a new height of 63 feet above ground level. All new antennas would continue to be housed in the canisters and entirely concealed.

Site Data

Future Land Use Plan:	Public and Institutional
Existing Land Use:	Institutional
Zoning:	B-1 - Limited Business District (Main Campus) R-1 - Single Family Residential (Athletic Complex)
Current Lot Sizes:	191.32 Acres (Including athletic complex, the main campus, and part of Lake Valentine)
Topography:	Rolling Terrain

Senior Planner Bachler reviewed the surrounding area, the Plan Evaluation and the Conditional Use Permit Evaluation Criteria.

Senior Planner Bachler provided the Findings of Fact for review:

General Findings:

1. The applicant has requested a Conditional Use Permit Amendment in order extend the height of the existing wireless antenna installation at 3900 Bethel Drive, approved in Planning Case 10-010.
2. The property at 3900 Bethel Drive is located in the B-1 - Limited Business District.
3. Cellular towers and antennas are allowed as a conditional accessory use in the B-1 District.
4. The proposed upgrade would increase the number of antennas from six (6) to nine (9).
5. The Zoning Code states that no antenna shall be mounted at a height exceeding 75 feet.
6. The proposed upgrade would increase the height of the antenna assembly canisters that house the antennas to 63 feet above ground level.
7. The antennas would be located approximately 1,185 feet from the nearest property line.
8. The antennas would be concealed inside the antenna assembly canisters, which will be painted to blend in with existing mechanical equipment on the roof.

Conditional Use Permit Evaluation Criteria:

9. The proposed plan would not have any impact on traffic or parking conditions.
10. The proposed plan will not produce any permanent noise, glare, odors, vibration, smoke, dust, air pollution, heat, liquid or solid waste, and other nuisance characteristics.
11. The proposed plan will not impact drainage.
12. The proposed plan will not impact population density.
13. The proposed antenna assembly canisters will likely only be visible from locations on Bethel University's campus and they are not anticipated to have an impact on land use compatibility with uses and structures on surrounding land or adjoining land values.
14. Park dedications are not applicable.
15. The proposed plan does not conflict with the general purpose and intent of the Zoning Code or the Comprehensive Development Plan for the City.

Senior Planner Bachler stated that based on the submitted plans and findings of fact, staff recommends approval of Planning Case 15-025 for a Conditional Use Permit Amendment at 3900 Bethel Drive. If the Planning Commission makes a recommendation of approval for this request, staff is recommending the following five (5) conditions be included with the approval:

1. The project shall be completed in accordance with the plans submitted as amended by the conditions of approval. Any significant changes to these plans, as determined by the City Planner, shall require review and approval by the Planning Commission and City Council.
2. A building permit shall be obtained for all proposed antennas and associated equipment prior to installation.
3. A final inspection of the existing antenna installation shall be completed by the City Building Official prior to the issuance of a building permit for the new antennas and associated equipment.
4. A Conditional Use Permit drafted by the City Attorney shall be signed by Bethel University prior to the issuance of any building permits.
5. The antenna assembly canisters shall be painted to blend in with the surrounding equipment on the roof to which they are attached.

DRAFT

Senior Planner Bachler reviewed the options available to the Planning Commission on this matter:

1. Recommend Approval with Conditions
2. Recommend Approval as Submitted.
3. Recommend Denial
4. Table

Chair Thompson opened the floor to Commissioner comments.

Commissioner Jones questioned how much capacity would be added to the towers after each were lengthened by 15%.

Mark Hennek, FDH Velocitel, explained that three additional antenna would be added to the towers, which would improve the overall capacity of the structure.

Commissioner Jones asked if future expansions would be necessary and if so, if a third tower could be added instead of placing additional height on the existing towers.

Mr. Hennek stated there could be potential interference if a third tower were added. He stated that any additional towers would need to be discussed with Bethel University.

Chair Thompson inquired if the additional capacity would be solely used by the college campus.

Mr. Hennek indicated that the additional capacity would be utilized by all AT&T users within a certain range of the campus.

Chair Thompson opened the public hearing at 6:44 p.m.

Chair Thompson invited anyone for or against the application to come forward and make comment.

There being no comment Chair Thompson closed the public hearing at 6:45 p.m.

Council Liaison Holmes requested further information regarding the lease agreement with AT&T.

Senior Planner Bachler discussed the lease agreement between AT&T Mobility and Bethel University in further detail.

Council Liaison Holmes expressed concern with how the Council would address this request and believed there may be concern with the additional two feet of tower height.

Chair Thompson encouraged the AT&T representatives to have range information available at the upcoming Council meeting and to be prepared to take further questions from the Council regarding this matter.

Mr. Hennek reported he could obtain a propagation map prior to the City Council meeting.

DRAFT

Further discussion ensued regarding the Bethel University campus and the antennas at the 2 Pine Tree Drive location.

Commissioner Holewa moved and Commissioner Hames seconded a motion to recommend approval of Planning Case 15-025 for a Conditional Use Permit Amendment at 3900 Bethel Drive based on the findings of fact and the submitted plans, as amended by the five (5) conditions in the January 6, 2016, report to the Planning Commission. The motion carried unanimously (6-0).

DRAFT

CONSENT ITEM - 6D

ARDEN HILLS

MEMORANDUM

DATE: January 25, 2016

TO: Honorable Mayor and City Councilmembers
Sue Iverson, Acting City Administrator

FROM: Matthew Bachler, Senior Planner

SUBJECT: **Josephine East, LLC Development Agreement Certificate of Completion and Release – 3177 Shoreline Lane**

Requested Action

Motion to approve the Certificate of Completion and Release pertaining to the Development Agreement between Josephine East, LLC and the City of Arden Hills for the property at 3177 Shoreline Lane.

Background

The City approved a four lot subdivision by Josephine East, LLC of a 2.5-acre property on the east side of Lake Josephine in 1999. Today, these lots are 3189, 3184, 3177, and 3170 Shoreline Lane. Steve Zawadski has submitted an application on behalf of the property owners at 3177 Shoreline Lane requesting a declaratory letter on whether the terms in the Development Agreement between Josephine East, LLC and the City have been satisfied. The property is in the process of being sold and the new owners are concerned about being subject to assessments or other enforcement related to the Development Agreement, which is on the property title. The request from Mr. Zawadski is included in Attachment A.

Discussion

The Development Agreement includes several terms and conditions related to the development of the lots and completion of public improvements. The Public Works and Community Development Departments have determined that the majority of these items were satisfied by

Josephine East, LLC following the subdivision approval. However, two items still remain in effect and are discussed further below. The City Attorney has drafted a Certificate of Completion and Release based on the staff review of the Development Agreement (Attachment D).

Shoreline Lane Extension
The subdivision plans included the extension of Shoreline Lane through the middle of the four new lots and ending at the property line of 3187 Lexington Avenue. At the time, the City's Official Map showed Shoreline Lane continuing north to connect with the segment of Shoreline Lane that extends south from Edgewater Avenue. The City Council approved a temporary, 50-foot wide cul-de-sac to be removed when 3187 Lexington Avenue was redeveloped and the entire length of Shoreline Lane could be completed. This cul-de-sac currently provides access to the four Shoreline Lane lots and 3187 Lexington Avenue.

Under the terms of the Development Agreement, Josephine East, LLC was required to provide an escrow for the cost of removing the cul-de-sac and extending Shoreline Lane to the northern boundary of the subdivision. No record of this escrow has been found on file. Staff believes this condition should remain in effect because it establishes that the existing cul-de-sac is temporary and that the City intends to connect the two ends of Shoreline Lane if 3187 Lexington Avenue is subdivided in the future. Properties within the Josephine East subdivision may still be subject to future assessments associated with the Shoreline Lane connection.

Basement Elevations
The Development Agreement establishes a minimum elevation for basements due to the location of the properties on Lake Josephine. No structure on any of the four lots is permitted to have a basement elevation below 887.8 feet. This condition would remain in effect and be enforced with any future redevelopment on the properties.

Recommended Action

Approve the Certificate of Completion and Release pertaining to the Development Agreement between Josephine East, LLC and the City of Arden Hills for the property at 3177 Shoreline Lane.

Attachments

A. Land Use Application and Declaratory Letter Request
B. Aerial Map of 3177 Shoreline Lane and Surrounding Area
C. Development Agreement – Josephine East, LLC
D. Josephine East, LLC Development Agreement Certificate of Completion and Release

Attachment A

ARDEN HILLS

1245 West Highway 96
Arden Hills, Minnesota 55112
Telephone (651) 792-7800
Fax (651) 634-5137
www.cityofardenhills.org

For Office Use Only	
Planning Case No.	15- 026
Submittal Date	12/15/15
Application Completed Date	N/A
Accepted by	MWB
Receipt Number	#864225
Council Decision	
Council Decision Date	

2015 LAND USE APPLICATION

Applicant Information

Applicant: Steve Zawadski, for the Owner

Address: 4614 Churchill St, Shoreview 55126

Telephone No.: 651-483-0518 Other: cell 651-387-9056

Fax No.: 651-483-9057

Email Address: steve z@ zawadskihomes.com

Property Information

Property Owner: Walter F. Bauer

Owner Address: 14431 W. Black Gold Lane, Sun City West, AZ 85375

Owner Telephone No. 651-245-6876 Other:

Address of Property Involved: 3177 Shoreline Lane, Arden Hills

Legal Description: see attached

Property ID No.: 34.30.23.44.0072 2537 000

Type of Use: Residential

Zone: R-2 Property Acreage: 80' x 376' = 30,000 SF

Type of Request

- ☐ Comprehensive Plan Amendment ($893 + $1,050 escrow)
- ☐ Conditional Use Permit or Amendment ($630; $315 for Home Occupation or if no Site Plan Review is required + $630 escrow)
- ☐ Interim Use Permit or Amendment ($630; $315 if no Site Plan Review is required + $735 escrow)
- ☐ Preliminary Plat ($630 + $26 per lot + $1,575 escrow)
- ☐ Final Plat ($525 + $26 per lot)
- ☐ Concept Planned Unit Development ($315)
- ☐ Master Planned Unit Development ($630 + $2,100 escrow)
- ☐ Final Planned Unit Development ($315 + $630 escrow)
- ☐ Planned Unit Development Amendment ($630; $315 if no Site Plan Review is required + $2,100 escrow)
- ☐ Site Plan Review ($315 + $630 escrow)
- ☐ Rezoning ($630 + $1,050 escrow)
- ☐ Zoning or City Code Amendment ($630 + $1,050 escrow)
- ☐ Minor Subdivision (lot split/consolidation) ($473 + $1,050 escrow)
- ☐ Variance (Zoning Code) ($315 + $630 escrow)
- ☐ Vacation of Easement or Right-of-Way ($420 + $630 escrow)
- ☐ Appeal of Administrative Decision ($105)
- ☒ Land Use Requests – Not Already Specified ($210)

Revised: 12-17-14

Brief Description of Request (please also include a typed, detailed letter explaining the project):

Seeking written City determination that developer has satisfied terms of Development Agreement and that the homeowners have no exposure.

IMPORTANT

- Certain applications are subject to review and approval by the Rice Creek Watershed District. Contact RCWD directly at 763-398-3070 for additional information.
- The land use application fees do not cover building, sign, or other permit fees that may be required upon approval of a land use application.
- All applications will be subject to additional fees for reimbursement of consultant costs associated with filing, reviewing, and processing of application in the form of an escrow to the City.

Filing & Information Requirements

The City requests that you make a pre-application meeting with the City Planner to discuss the application process, requirements, and deadlines. Unless waived by the City Planner or Planning Commission, a certified survey of the property is required for all applications. A checklist with additional application requirements can be found at www.cityofardenhills.org/landuseapplications.

Complete/Incomplete Applications

An incomplete application will delay the processing of land use requests. The application approval time commences and an application is considered officially filed when the City Planner has received and examined the application and determined that the application is complete. A decision on whether the application is complete or incomplete shall be made within fifteen (15) working days following the submittal of the application. When the application is deemed to be "complete" it shall be placed on the agenda of the first possible Planning Commission meeting provided that all required public notices have been sent and published.

Payment of Fees

The undersigned acknowledges that she/he understands that before a land use application can be deemed complete, all required information and fees (including all deposits) must be paid to the City. If additional fees are required to cover costs incurred by the City, the City Planner has the right to require additional payment from one or more of the undersigned, who shall be jointly liable for such fees. Such expenses may include (but are not limited to) direct city payroll and overhead costs, fees paid to consultants and other professionals, and the cost of printing, mailing, and supplies. The City may withhold final action on a land use application, withhold building permits, and/or rescind prior action until all miscellaneous fees have been paid. Applicants are advised that an escrow deposit is required at the time of the submittal of the land use application to offset costs associated with the proposed project. Unused portions of an escrow are returned to the applicant upon successful implementation of an approved plan.

Notice of Meeting Attendance

In order for the Planning Commission and the City Council to consider any application, the applicant or a designated representative must be present at the scheduled meeting. If not, the matter may be tabled until the next available agenda.

Agenda Deadline and Meeting Schedule

The deadline for submittal of land use applications is required according to the schedule outlined below. There are **no exceptions.** Failure to submit all application materials by the deadline date may delay the review process. Planning Commission meetings are typically held on the first Wednesday after the first Monday of each month at 6:30 PM, though please contact City Hall to verify the meeting date and time. City Council meetings are held typically the last Monday of the same month at 7:00 PM. Meetings are held in the Council Chambers at the City of Arden Hills, 1245 West Highway 96, Arden Hills, Minnesota 55112, unless otherwise stated. Applicants are advised that additional meetings and/or workshops are scheduled when necessary upon approval of the Planning Commission.

2015 SCHEDULE *(*subject to change)*

APPLICATION DEADLINE DATE*	TENTATIVE PLANNING COMMISSION MEETING DATE* (Generally held on the first Wednesday after the first Monday at 6:30 p.m.)	TENTATIVE CITY COUNCIL MEETING DATE* (Generally held on the last Monday at 7:00 p.m.)
December 1 (2014)	January 7	January 26
January 5	February 4	February 23
February 2	March 4	March 30
March 2	April 8	April 27
April 6	May 6	May 25
May 4	June 3	June 29
June 1	July 8	July 27
July 6	August 5	August 31
August 3	September 9	September 28
September 7	October 7	October 26
October 5	November 4	November 30
November 2	December 9	December 28
December 7	January 6 (2016)	January 25 (2016)

Acknowledgement and Signature

I acknowledge that I have read all of the information listed in the City of Arden Hills Land Use Application and fully understand that I am responsible for all costs incurred by the City related to the processing of this application.

Property Owner Signature (Required) — Date: 12-14-15

Applicant Signature (If different than the property owner) — Date: 12/11/15

Please contact the City Planner at 651-792-7800
if you have any questions regarding this application.

Additional copies of this application form are available on the City's website: www.cityofardenhills.org/landuseapplications

Revised: 12-17-14

STEVEN J. ZAWADSKI
4614 CHURCHILL STREET
SHOREVIEW, MN 55126
651-387-9056

December 11, 2015

Re: **Land Use Application, 3177 Shoreline Lane, Arden Hills**

To: City of Arden Hills

Overview

Applicants are seeking a short declaratory letter from the City of Arden Hills regarding a Developer's Agreement, and whether the terms of the Agreement have been satisfied, and whether homeowner(s) in the affected development have any ongoing liability exposure as a result of the Developer's Agreement remaining in place.

Background

In 2003, Walter F. Bauer(father-in-law of applicant) purchased a residential home at the above address; the title work listed a 1999 Development Agreement at that time, and it remains on the title today(see attached).

Specifically, the document is: **"Development Agreement Josephine East, LLC, by and between the City of Arden Hills, a municipal corporation, and Josephine East, LLC, a MN limited liability company, dated August 23, 1999 and filed October 11, 1999 as Document No. 1577440".**

Mr. Bauer is selling the home, and currently resides in Arizona. The sale is all but completed, except for the presence of this Development Agreement on the Title. The new purchasers are asking for the Development Agreement to be satisfied and or removed from the title. Money has been put in escrow pending resolution of the Development Agreement's status.

The City staff has explained that the Development Agreement must stay in place, as it establishes that the existing cul-de-sac is temporary, and that the City may install a through-road at some point in the future. At this point, neither applicant or buyer of the property are requesting that the City reverse its position to keep the Agreement in place.

Request

Applicants are simply requesting a letter from the City clarifying whether the terms and conditions of the Development Agreement have been satisfied. Did the original developer complete his obligations under the Agreement to the satisfaction of the City, or are there any outstanding issues? The new buyers are trying to ascertain whether their home will be subject to any monetary assessments or other City enforcement, specifically related to this Agreement, *other than* the cul-de-sac/through-street issue.

This clarification will enable the home sale to be completed. Thank you in advance.

Sincerely,

Steven J. Zawadski

CC: WFB

Planning Case 15-026
Josephine East, LLC Development Agreement Completion
Notice 3177 Shoreline Lane

Attachment B

0 50 100 200 Feet

Boundary of Josephine East, LLC Subdivision

PC 99-03

Attachment C

DEVELOPMENT AGREEMENT
JOSEPHINE EAST, LLC

This Agreement is made and entered into to be effective the 23rd day of August, 1999, by and between the City of Arden Hills, a municipal corporation and political subdivision of the State of Minnesota (the **"City"**), and Josephine East, LLC, a Minnesota Limited Liability Company (the **"Developer"**).

RECITALS

1. On May 24, 1999, the Arden Hills City Council approved Planning Case 99-03 (the **"Approval"**) relative to the platting and development of certain property located within the City and described as follows (the **"Property"**):

   Parcel 1: (abstract property)

   The North 80 feet of the South 237.40 feet of that part of Government Lot 7, North of the South 6 acres in Section 34, Township 30, Range 23, Ramsey County, Minnesota.

   Parcel 2: (torrens property - Certificate of Title No. 276605)

   The North 80 feet of the South 157.4 feet of all that part of the South ½ of Lot 7, Section 34, Township 30, Range 23 lying North of the South 6 acres of said Lot 7, together with and subject to a perpetual right-of-way over that certain roadway running from Lexington Avenue Westerly toward Lake Josephine at a point approximately 196.45 feet South of the Northerly line of South ½ of that part of Government Lot 7 lying North of South 6 acres thereof.

2. The Approval was subject to a number of conditions and contingencies.

3. In order to help clarify and define the parties respective obligations with respect to the development of the Property, the parties have agreed to enter into this Development Agreement.

NOW THEREFORE, the parties hereto hereby agrees as follows:

1. **Conditions and Qualifications Regarding the Approval.** The Approval conditioned the approval of the final plat upon the conditions and qualifications set forth and described below with which the Developer hereby agrees to comply:

   A. **Title.** The Developer shall provide to the City evidence of title to the Property

in a form and substance reasonably acceptable to the City Attorney.

B. **Extension of Shoreline Lane.** The plat shall dedicate an extension of Shoreline Lane through the Property as shown on the final plat approved May 24, 1999. (See Subsection 1 E, below.)

C. **Grading Plan, Sediment and Erosion Control Measures.** The plans and specifications for the grading plan and the erosion control measures (the "**Grading/Erosion Control Plans and Specifications**") are attached hereto as Exhibit A. All streets and utilities for the project must be constructed in accordance with the Grading/Erosion Control Plans and Specifications. In addition:

1. All landscaping, sodding, seeding, or planting performed by the Developer pursuant to this Development Agreement or any other contract (collectively, the **"Landscaping"**) shall continue to be the responsibility of the Developer until the earlier of the following:

   A. One year from the date of any such landscaping; or,

   B. The closing on the sale of any lot on which the Landscaping was performed.

2. Developer shall seed or sod all disturbed areas outside of the street right-of-way within ten (10) days of completion of grading;

3. All work necessary to complete the grading plan and erosion control measures pursuant to the **Grading/Erosion Control Plans** and Specifications shall be completed no later than June 30, 2000.

Any handwritten notations or modifications may have been added to Exhibit A and required by the Development Agreement shall be incorporated by the Developer into a final draft of Exhibit A and certified by a registered surveyor.

D. **Park Dedication Fee.** The Developer shall pay the City a park dedication fee in the amount of $14,184.00. The payment of the park dedication fee shall be allocated equally between each of the four lots contemplated by the plat, and shall be paid no later than the earlier of the following:

   A. Issuance of a building permit with respect to said lot; or
   B. The closing on the sale of the lot to an entity /person other than the developer.

E. **Escrow for Future Extension of Shoreline Lane.** As part of the Approval, the Developer is not being required to fully improve Shoreline Lane through the entire Property at the present time. In order to assure the availability of funds for the future improvement of Shoreline Lane to the north property line of the Property, the Developer shall deposit with the City the amount of $ 21,750. Said amount shall be in addition to, and may be co-mingled with, the Improvement Escrow funds referred to in Subsection N below. The escrow shall be held by the City until the completion by the Developer of the improvements effecting the extension of Shoreline Lane to the northerly boundary of the plat.

F. **Rice Creek Watershed District.** The Developer shall provide the staff with the written approval by the Rice Creek Watershed District for the development contemplated by the plat. The approval shall be in a form and substance acceptable to the City Staff.

G. **Basement Elevations.** The Developer hereby agrees that no structure shall be constructed on the Property with the basement which has an elevation below 887.8 feet. This condition, at the option of the City, shall be placed in the form of a recordable instrument recorded/registered against the Property.

H. **Utility and Drainage Easements.** The Developer shall provide the City with utility and drainage easements, in a form acceptable to the City Staff as required by the City's Ordinance Section 22-8(17)(e) and as shown on the final plat approved May 24, 1999.

I. **Construction Specification for Street and Utilities.** The plans and specifications for the streets and utilities for the project are attached hereto as Exhibit B (the "**Street/Utility Plans and Specifications**"). All streets and utilities for the project must be constructed in accordance with the Street/Utility Plans and Specifications. In addition:

1. Unusable material within the roadways shall be removed by the Developer;

2. The City Engineer, as Developer's expense, shall be present, at all times deemed appropriate by the City Engineer during, underground pipe construction and street construction. (This may mean that the City Engineer will be present full time during such activity.) The City Engineer shall be given no less than 24 hours notice of the commencement of any such activity. At all other times, the City Engineer may make periodic visits to the site to insure that the Developer and its contractor are in compliance with the terms of this Agreement, which visits shall be at the expense of the Developer.

In addition to whatever other remedies the City may have, Developer's failure to comply with the terms of this section shall permit the City Engineer to issue a stop work order which may result in rejection of the work and which shall obligate the Developer to take all reasonable steps, as directed by the City's Engineer, to insure that the improvements are constructed and inspected pursuant to the terms of this Agreement. Such failure to comply shall further result in the assessment of a penalty in an amount equal to 1%, per occurrence, of the amount of security required in Section 1. O. attributable to underground pipe and street construction.

3. The City reserves the right to test as necessary, at the Developer's expense, all grading work. At a minimum, a test roll of the street subgrade shall be passed prior to acceptance of the subgrade by the City.

4. Subgrading and the initial course of the street improvements shall be completed by August 15, 2000. The final wear course of the street improvement shall be completed by November 1, 2000..

5. All utilities shall be installed by the appropriate utility company;

6. The Developer shall arrange for the installation of underground gas, electric, telephone and cable TV after the first lift of asphalt is complete, but before the final lift is started;

7. All utilities improvements shall be completed by July 15, 2000.

Any handwritten notations or modifications may have been added to Exhibit B and required by the Development Agreement shall be incorporated by the Developer into a final draft of Exhibit B and certified by a registered engineer.

J. **Temporary Cul-de-Sac Easement.** Prior to the endorsement of approval on the final plat, the Developer shall provide the City with a temporary easement in the form of the attached Exhibit C.

K. **Acquisition of Right-of-Way From the South.** The Developer and City shall enter into an easement agreement relative to the acquisition of certain real property to the south of the plat prior to the endorsement of approval on the final plat. The form of the easement agreement shall be in the form of the attached Exhibit D.

L. **Attorney's Fees.** The City hereby acknowledges the receipt of $1,118.10 as and for the attorney's fees required to be paid in accordance with the Approval.

M. **Notification of Purchasers.** The Developer shall inform all prospective purchasers of any of the lots in the property of the existence of the conditions imposed by the City Council pursuant to the Approval. The City may, at the City's discretion, record the Approval, or require the execution of any other recordable instrument (including this Development Agreement) which would effectuate such notification.

N. **Improvement Security**. Prior to the City's endorsement of approval on the final plat, the Developer shall deposit security with the City Administrator in an amount equal to 125% of the City's Engineer's estimate of the cost of constructing the required improvements and payment of any administrative fees required herein (the "**Improvement Escrow**"). The security may be in the form of a cash escrow fund, a performance bond, or a letter of credit. The form of security shall be approved by the City Attorney. The Improvement Escrow shall include all funds to be escrowed in accordance with Section 1. E., above.

Except as otherwise provided in Section 1. E., above, upon completion of required improvements and acceptance by the City, the City Council shall reduce the amount of security for the completed improvements provided that in no case shall the total remaining security be equal to less than 125% of the estimated costs of the incomplete improvements and of the estimated and unpaid administrative fees.

O. **Estimated Costs of Improvements/Administrative Fees.** Pursuant to the Developer's agreement in the original application, the Developer shall deposit with the City the sum of $1500 to cover a portion of the legal and engineering fees incurred by the City with respect to the project. It is specifically acknowledged that said sum is not the precise amount due and owing at the present time, which amount has not been calculated. Furthermore, there may be additional fees and expenses incurred by the City with respect to the project which shall be the responsibility of Developer. The Developer shall pay any additional fees incurred through the date of this Agreement, as well as any additional amount which may be incurred subsequent hereto within ten (10) days of receipt of a statement therefor.

2. **Miscellaneous Requirements.** [NONE]

3. **Binding Effect**. The terms and provisions of this agreement shall be binding upon and inure to the benefit of the heirs, representatives, successors and assigns of the parties hereto and shall be binding upon all future owners of all or any part of the Property and shall be deemed covenants running with the land. This Agreement, at the option of the City, shall be placed of record so as to give notice thereto to any subsequent purchasers and encumbrancers of all or any part of Property and all recording fees, if any, shall be paid by the

Developer.

4. **Notice.** Whenever in this Agreement notice is required to be given by one party to the other, such notice shall be delivered personally or shall be sent by certified mail, return receipt requested to the following addressees. Such notice shall be deemed timely given when delivered personally or when deposited in the mail in accordance with this section.

If to the City:

City Administrator
City of Arden Hills

Arden Hills, MN 55112

If to the Developer:

5. **Evidence of Recording.** Developer agrees to provide the City with evidence that the plat of Josephine East, LLC (the **"Plat")** has been recorded/registered in accordance with the terms and provisions of this Development Agreement within five (5) days of the date thereof.

6. **Incorporation by Reference.** All plans, special provisions, proposals, specifications and contracts for the improvements furnished and let pursuant to this Agreement shall be and hereby are made a part of this Agreement by reference as if fully set out herein.

7. **Default.** The occurrence of any of the following shall be considered an "event of default" in the terms and conditions contained in this Agreement:

A. Failure of the Developer to comply with any of the terms and conditions contained in this Agreement; and/or,

B. The failure of the Developer to comply with any applicable ordinance or statute with respect to the development of the Property.

8. **Remedies.** Upon the occurrence of any event of default, the City, in addition to any other remedy which may be available to it, shall be permitted to do any or all of the

following, as it deems appropriate:

A. City may make advances or take other steps to cure the default, and, where necessary, enter the Subject Property for that purpose. In making any such advances, the City may (but shall not be required to) draw upon the funds contained in the Improvement Escrow. The Developer shall pay all sums so advanced or expenses incurred by the City, upon demand, with interest from the dates of such advances or expenses at the rate of 10% per annum. No action taken by the City pursuant to this section shall be deemed to relieve the Developer from curing any such default to the extent that it is not cured by the City or from any other default hereunder. The City shall not be obligated, by virtue of the existence or exercise of this right, to perform any such act or cure any such default. The Developer shall save, indemnify, and hold harmless, including reasonable attorney fees, the City from any liability or other damages which may be incurred as a result of the exercise of the City's rights pursuant to this section.

B. Obtain an Order from a Court of competent jurisdiction requiring the Developer to specifically perform its obligations pursuant to the terms and provisions of this Agreement.

C. Exercise any other remedies which may be available to it including an action for damages.

D. Withhold the issuance of any or all building permits and/or prohibit the occupancy of all building(s) for which permits have been issued.

E. In addition to the remedies and amounts payable as set forth herein, upon the occurrence of an event of default, the Developer shall pay to the City all fees and expenses, including reasonable attorney, engineering and consulting fees, incurred by the City as a result of the event of default, whether or not a lawsuit or other action is formally taken.

9. **Prior Land Occupancy.** In the event that any lot the Plat becomes occupied prior to completion of all improvements contemplated by this Agreement and acceptance thereof by the City, Developer shall provide all maintenance necessary (specifically including, but not limited to, snow plowing) to provide pedestrian and vehicular access to Lexington Avenue, provided:

A. This shall not require Developer to provide any such maintenance upon any occupied lot; and

B. The Developer's obligation hereunder shall terminate upon completion of and

acceptance by the City of a publicly dedicated right-of-way which will provide access from and to Shoreline Lane as referred to in Section 1. K., above.

IN WITNESS WHEREOF, the City and Developer have caused this Agreement to be executed as of the date and year first above written.

Dated: 8/23/99,

Dennis Probst, Mayor

Attested:

Terrance R Pott

City Administrator

STATE OF MINNESOTA)
) ss.
COUNTY OF Ramsey)

On this 23rd day of August, 1999, before me, a notary public within and for said county, personally appeared ~~[illegible]~~ Dennis Probst, to me known to be the mayor of the City of Arden Hills and he executed the foregoing instrument and acknowledged that they executed the same by authority of and on behalf of the City of Arden Hills.

SHEILA STOWELL
NOTARY PUBLIC-MINNESOTA
My Commission Expires Jan. 31, 2000

Sheila Stowell

Dated: August 23, 1999

JOSEPHINE EAST, LLC

By [signature]
Its Partner

In the Presence of:

Donald P Evertz

STATE OF MINNESOTA)
) ss.
COUNTY OF Ramsey)

On this 23rd day of August, 1999, before me, a notary public within and for said county, personally appeared Frank Rekuski, Jr., to me known to be respectively the Partner and — and he/she executed the foregoing instrument and acknowledged that they executed the same by authority of and on behalf of Josephine East, LLC.

Sheila Stowell
Notary Public

SHEILA STOWELL
NOTARY PUBLIC-MINNESOTA
My Commission Expires Jan. 31, 2000

DRAFTED BY:

PETERSON FRAM & BERGMAN, P.A.
(John Michael Miller, Atty #7326X)
50 East Fifth Street, Suite 300
St. Paul, MN 55101
(651) 291-8955

F:\users\JOHN\Josephine East.Develop.agr.4.wpd
August 20, 1999 (11:28AM)

STREET AND UTILITY EASEMENT

Josephine East, LLC, a Minnesota limited liability company, Grantor, of Ramsey County, Minnesota, for and in consideration of One Dollar and other good and valuable consideration, does hereby grant and convey to the City of Arden Hills, a municipal corporation, Grantee, the right, authority and easement to freely use the premises hereinafter described (the "Easement Tract") for the purposes described below:

> That part of Lots 1 and 2, Block 1 and Lots 1 and 2, Block 2, JOSEPHINE EAST, LLC, Ramsey County, Minnesota lying within the circumference of a circle having a radius of 50.00 feet; the center point of said circle being a point on the centerline of Shoreline Lane which is 50.00 feet northerly of the South line of said JOSEPHINE EAST LLC, as measured along said centerline.

The purpose of this easement is to allow the City the free right to enter upon the Easement Tract for grading, leveling, filling, draining, paving, building, maintaining, repairing and rebuilding public streets and highways thereon, together with such sidewalks, bridges, culverts, ramps and cuts as may be necessary, and any further uses as are necessary to maintain said land for a public purpose, and for the further purpose of using the land for construction, installation and maintenance of storm sewers, and drainage facilities, and all other public utilities ordinarily located within public streets, and to include the right to construct slopes and deposit waste material thereon, to acquire and obtain exclusive ownership of all the dirt or other material necessary to be excavated, removed or taken, to acquire all structures, trees, shrubs, grasses and herbage now existing and growing or hereafter planted and grown upon or within said strip(s) of land. This easement shall also include a temporary easement, as necessary, over and across the land adjacent to the Easement Area in order to accomplish any construction or maintenance which may be allowed by this easement.

The dedication and acceptance of this easement for road purposes does not obligate the Grantee to construct or maintain a road thereon until such time as such construction and maintenance is deemed by the Grantee necessary for the public interest and welfare; however, this shall not be construed as a limitation upon the rights of the Grantee to exercise its rights hereunder when the Grantee deems it necessary and in the public interest.

The easement granted hereby may be terminated only upon the following:

1. Completion of street and/or other improvements deemed appropriate by the Grantee so that Shoreline Lane, as shown on the plat of Josephene East LLC, is fully improved; and,

2. The recording of an instrument signed by the Grantee terminating the easement granted hereby.

In the event this easement is terminated, the City agrees to thereafter put the Easement Tract back into its former condition, as reasonably possible under the circumstances.

TO HAVE AND TO HOLD, said easement until said Grantee, its successors and assigns, as described above.

IN WITNESS WHEREOF, said Grantor has set its hand this 23 day of AUGUST, 1999.

JOSEPHINE EAST, LLC

By _____
Its Partner

STATE OF MINNESOTA)
) ss.
COUNTY OF Ramsey)

The foregoing instrument was acknowledged before me this 23rd day of August, 1999, by Frank Rekuski, Jr. the Partner of Josephine East, LLC, a limited liability company under the laws of Minnesota, on behalf of said limited liability company.

SHEILA STOWELL
NOTARY PUBLIC-MINNESOTA
My Commission Expires Jan. 31, 2000

_____
Notary Public, Ramsey County, MN

DRAFTED BY:

MILLER LAW FIRM

F:\users\JOHN\Josephine East.street-utility.esmnt.1.wpd

Attachment D

(Space Reserved for Recording Data.)

CERTIFICATE OF COMPLETION
AND
RELEASE OF DEVELOPMENT AGREEMENT

Date: _____, 2016

WHEREAS, the **CITY OF ARDEN HILLS,** a Minnesota municipal corporation ("City"), and **JOSEPHINE EAST, LLC**, a Minnesota limited liability company ("Developer") entered into a Development Agreement dated August 23, 1999 ("Development Agreement") and recorded October 11, 1999 as Ramsey County Document No. 1577440.

WHEREAS, Developer has performed and met all requirements of the Development Agreement and there is no longer a need to preserve the City's rights as detailed in the Development Agreement as recorded against the property, **except** that the City reserves the right to enforce paragraphs 1E and 1G of the Development Agreement which state in their entirety as follows:

1.E. **Escrow for Future Extension of Shoreline Lane.** As part of the Approval, the Developer is not being required to fully improve Shoreline Lane through the entire Property at the present time. In order to assure the availability of funds for the future improvement of Shoreline Lane to the north property line of the Property, the Developer shall deposit with the City the amount of $21,750. Said amount shall be in addition to, and may be co-mingled with, the Improvement Escrow funds referred to in Subsection N below. The escrow shall be held by the City until the completion by the Developer of the improvements effecting the extension of Shoreline Lane to the northerly boundary of the plat.

1.G. **Basement Elevations.** The Developer hereby agrees that no structure shall be constructed on the Property with the basement which has an elevation below 887.8 feet. This condition, at the option of the City, shall be placed in the form of a recordable instrument recorded/registered against the Property.

NOW, THEREFORE, this Certificate of Completion and Release is to certify that the Developer has fully complied with its obligations under the Development Agreement and the

City hereby releases the Developer and any successors in interest from all terms of the Development Agreement with the exception that the City fully reserves its right to enforce paragraphs 1E and 1G of the Development Agreement both as to the Developer and any successors in interest.

CITY OF ARDEN HILLS

By: _____
David Grant, Mayor

(SEAL)

And _____
Sue Iverson, Interim City Administrator

STATE OF MINNESOTA)
(ss.
COUNTY OF RAMSEY)

The foregoing instrument was acknowledged before me this _____ day of _____, 2016, by **David Grant** and by **Sue Iverson**, respectively the Mayor and Interim City Administrator of the **City of Arden Hills**, a Minnesota municipal corporation, on behalf of the corporation and pursuant to the authority granted by its City Council.

_____
Notary Public

This Instrument was Drafted by:
CAMPBELL KNUTSON, *P.A.*
Grand Oak Office Center I
860 Blue Gentian Road, Suite 290
Eagan, Minnesota 55121
[JJJ]

CONSENT ITEM – 6E

ARDEN HILLS

MEMORANDUM

DATE: January 25, 2016

TO: Honorable Mayor and City Council
Sue Iverson, Acting City Administrator
Director of Finance and Administrative Services

FROM: Amy Dietl, City Clerk
Dave Perrault, Finance Analyst

SUBJECT: 2016 Employee Compensation Plan – Non Union Employees

Background

The City Council discussed this item at its work session on January 19, 2016. The consensus of the Council was to recommend a cost of living adjustment (COLA) of 2.75% to non-union employees and to approve the Seasonal Employee 2016 part-time scale as presented. Council directed staff to bring this item back for approval at the regular City Council meeting on January 25, 2016.

Recommendation

Approve the 2016 Employee Compensation Plan for non-union employees retroactive to January 1, 2016, as presented and the Seasonal Employee 2016 part-time scale as presented.

Attachment

Attachment A: 2016 City of Arden Hills Pay Matrix
Attachment B: 2016 City of Arden Hills Pay Matrix (for employees still on old plan)
Attachment C: Public Works Seasonal/Parks & Recreation 2016 Part-Time Pay Scale

Attachment A

2016 City of Arden Hills Pay Matrix **2.75% COLA**

2016 - Yearly

	Points			Step One	Step Two	Step Three	Step Four	Step Five	Step Six	Step Seven	Step Eight	Step Nine
24	756	-	800	$ 115,075.22	$ 118,527.47	$ 122,083.30	$ 125,745.79	$ 129,518.17	$ 133,403.71	$ 137,405.82	$ 141,528.00	$ 145,773.84
23	711		755	$ 108,561.52	$ 111,818.36	$ 115,172.91	$ 118,628.10	$ 122,186.95	$ 125,852.55	$ 129,628.13	$ 133,516.97	$ 137,522.48
22	666		710	$ 102,416.53	$ 105,489.03	$ 108,653.70	$ 111,913.31	$ 115,270.71	$ 118,728.83	$ 122,290.69	$ 125,959.42	$ 129,738.20
21	621		665	$ 96,619.37	$ 99,517.95	$ 102,503.49	$ 105,578.59	$ 108,745.95	$ 112,008.33	$ 115,368.58	$ 118,829.64	$ 122,394.52
20	576		620	$ 91,150.35	$ 93,884.86	$ 96,701.40	$ 99,602.44	$ 102,590.52	$ 105,668.23	$ 108,838.28	$ 112,103.43	$ 115,466.53
19	531		575	$ 85,990.89	$ 88,570.62	$ 91,227.74	$ 93,964.57	$ 96,783.51	$ 99,687.01	$ 102,677.62	$ 105,757.95	$ 108,930.69
18	488		530	$ 81,123.48	$ 83,557.19	$ 86,063.90	$ 88,645.82	$ 91,305.20	$ 94,044.35	$ 96,865.68	$ 99,771.65	$ 102,764.80
17	447		487	$ 76,531.60	$ 78,827.54	$ 81,192.37	$ 83,628.14	$ 86,136.98	$ 88,721.09	$ 91,382.73	$ 94,124.21	$ 96,947.93
16	408		446	$ 72,199.61	$ 74,365.60	$ 76,596.57	$ 78,894.47	$ 81,261.30	$ 83,699.14	$ 86,210.11	$ 88,796.42	$ 91,460.31
15	371		407	$ 68,112.84	$ 70,156.23	$ 72,260.92	$ 74,428.74	$ 76,661.61	$ 78,961.45	$ 81,330.30	$ 83,770.21	$ 86,283.31
14	336		370	$ 64,257.40	$ 66,185.12	$ 68,170.67	$ 70,215.79	$ 72,322.27	$ 74,491.94	$ 76,726.69	$ 79,028.49	$ 81,399.35
13	303		335	$ 60,620.19	$ 62,438.79	$ 64,311.96	$ 66,241.31	$ 68,228.55	$ 70,275.41	$ 72,383.67	$ 74,555.18	$ 76,791.84
12	272		302	$ 57,188.86	$ 58,904.52	$ 60,671.66	$ 62,491.81	$ 64,366.56	$ 66,297.56	$ 68,286.48	$ 70,335.08	$ 72,445.13
11	243		271	$ 53,951.75	$ 55,570.30	$ 57,237.41	$ 58,954.53	$ 60,723.17	$ 62,544.86	$ 64,421.21	$ 66,353.85	$ 68,344.46
10	216		242	$ 50,897.88	$ 52,424.82	$ 53,997.57	$ 55,617.49	$ 57,286.02	$ 59,004.60	$ 60,774.74	$ 62,597.98	$ 64,475.92
9	190		215	$ 48,016.87	$ 49,457.38	$ 50,941.10	$ 52,469.33	$ 54,043.41	$ 55,664.71	$ 57,334.66	$ 59,054.70	$ 60,826.34
8	166		189	$ 45,298.93	$ 46,657.90	$ 48,057.64	$ 49,499.37	$ 50,984.35	$ 52,513.88	$ 54,089.30	$ 55,711.97	$ 57,383.33
7	143		165	$ 42,734.84	$ 44,016.89	$ 45,337.39	$ 46,697.52	$ 48,098.44	$ 49,541.39	$ 51,027.64	$ 52,558.46	$ 54,135.22
6	121		142	$ 40,315.89	$ 41,525.36	$ 42,771.12	$ 44,054.26	$ 45,375.88	$ 46,737.16	$ 48,139.28	$ 49,583.45	$ 51,070.96
5	101		120	$ 38,033.86	$ 39,174.87	$ 40,350.12	$ 41,560.62	$ 42,807.44	$ 44,091.67	$ 45,414.42	$ 46,776.85	$ 48,180.15
4	83		100	$ 35,881.00	$ 36,957.43	$ 38,066.15	$ 39,208.14	$ 40,384.38	$ 41,595.91	$ 42,843.79	$ 44,129.10	$ 45,452.98
3	65		82	$ 33,850.00	$ 34,865.50	$ 35,911.46	$ 36,988.81	$ 38,098.47	$ 39,241.43	$ 40,418.67	$ 41,631.23	$ 42,880.17
2	49		64	$ 31,933.96	$ 32,891.98	$ 33,878.74	$ 34,895.10	$ 35,941.95	$ 37,020.21	$ 38,130.82	$ 39,274.74	$ 40,452.99
1	0		48	$ 30,126.38	$ 31,030.17	$ 31,961.08	$ 32,919.91	$ 33,907.50	$ 34,924.73	$ 35,972.47	$ 37,051.65	$ 38,163.19

2016 - Monthly

	Points			Step One	Step Two	Step Three	Step Four	Step Five	Step Six	Step Seven	Step Eight	Step Nine
24	756	-	800	$ 9,589.61	$ 9,877.29	$ 10,173.61	$ 10,478.82	$ 10,793.19	$ 11,116.98	$ 11,450.49	$ 11,794.00	$ 12,147.82
23	711		755	$ 9,046.80	$ 9,318.20	$ 9,597.75	$ 9,885.68	$ 10,182.25	$ 10,487.72	$ 10,802.35	$ 11,126.42	$ 11,460.21
22	666		710	$ 8,534.72	$ 8,790.76	$ 9,054.48	$ 9,326.11	$ 9,605.90	$ 9,894.07	$ 10,190.90	$ 10,496.62	$ 10,811.52
21	621		665	$ 8,051.62	$ 8,293.17	$ 8,541.96	$ 8,798.22	$ 9,062.17	$ 9,334.03	$ 9,614.05	$ 9,902.47	$ 10,199.55
20	576		620	$ 7,595.87	$ 7,823.74	$ 8,058.45	$ 8,300.21	$ 8,549.21	$ 8,805.69	$ 9,069.86	$ 9,341.96	$ 9,622.22
19	531		575	$ 7,165.91	$ 7,380.89	$ 7,602.32	$ 7,830.39	$ 8,065.30	$ 8,307.26	$ 8,556.47	$ 8,813.17	$ 9,077.56
18	488		530	$ 6,760.29	$ 6,963.10	$ 7,172.00	$ 7,387.16	$ 7,608.77	$ 7,837.03	$ 8,072.14	$ 8,314.31	$ 8,563.74
17	447		487	$ 6,377.64	$ 6,568.97	$ 6,766.04	$ 6,969.02	$ 7,178.09	$ 7,393.43	$ 7,615.23	$ 7,843.69	$ 8,079.00
16	408		446	$ 6,016.64	$ 6,197.14	$ 6,383.05	$ 6,574.54	$ 6,771.78	$ 6,974.93	$ 7,184.18	$ 7,399.71	$ 7,621.70
15	371		407	$ 5,676.07	$ 5,846.36	$ 6,021.75	$ 6,202.40	$ 6,388.47	$ 6,580.13	$ 6,777.53	$ 6,980.86	$ 7,190.28
14	336		370	$ 5,354.79	$ 5,515.43	$ 5,680.89	$ 5,851.32	$ 6,026.86	$ 6,207.67	$ 6,393.90	$ 6,585.71	$ 6,783.28
13	303		335	$ 5,051.69	$ 5,203.24	$ 5,359.33	$ 5,520.11	$ 5,685.72	$ 5,856.29	$ 6,031.98	$ 6,212.94	$ 6,399.32
12	272		302	$ 4,765.74	$ 4,908.71	$ 5,055.98	$ 5,207.66	$ 5,363.88	$ 5,524.80	$ 5,690.54	$ 5,861.26	$ 6,037.10
11	243		271	$ 4,495.98	$ 4,630.86	$ 4,769.79	$ 4,912.88	$ 5,060.27	$ 5,212.08	$ 5,368.44	$ 5,529.49	$ 5,695.38
10	216		242	$ 4,241.49	$ 4,368.74	$ 4,499.80	$ 4,634.80	$ 4,773.84	$ 4,917.05	$ 5,064.57	$ 5,216.50	$ 5,373.00
9	190		215	$ 4,001.41	$ 4,121.45	$ 4,245.10	$ 4,372.45	$ 4,503.62	$ 4,638.73	$ 4,777.89	$ 4,921.23	$ 5,068.87
8	166		189	$ 3,774.92	$ 3,888.16	$ 4,004.81	$ 4,124.95	$ 4,248.70	$ 4,376.16	$ 4,507.45	$ 4,642.67	$ 4,781.95
7	143		165	$ 3,561.24	$ 3,668.08	$ 3,778.12	$ 3,891.46	$ 4,008.21	$ 4,128.45	$ 4,252.31	$ 4,379.88	$ 4,511.27
6	121		142	$ 3,359.66	$ 3,460.45	$ 3,564.26	$ 3,671.19	$ 3,781.33	$ 3,894.77	$ 4,011.61	$ 4,131.96	$ 4,255.92
5	101		120	$ 3,169.49	$ 3,264.58	$ 3,362.51	$ 3,463.39	$ 3,567.29	$ 3,674.31	$ 3,784.54	$ 3,898.08	$ 4,015.02
4	83		100	$ 2,990.09	$ 3,079.79	$ 3,172.18	$ 3,267.35	$ 3,365.37	$ 3,466.33	$ 3,570.32	$ 3,677.43	$ 3,787.75
3	65		82	$ 2,820.84	$ 2,905.46	$ 2,992.63	$ 3,082.41	$ 3,174.88	$ 3,270.12	$ 3,368.23	$ 3,469.27	$ 3,573.35
2	49		64	$ 2,661.17	$ 2,741.00	$ 2,823.23	$ 2,907.93	$ 2,995.17	$ 3,085.02	$ 3,177.57	$ 3,272.90	$ 3,371.09
1	0		48	$ 2,510.54	$ 2,585.85	$ 2,663.43	$ 2,743.33	$ 2,825.63	$ 2,910.40	$ 2,997.71	$ 3,087.64	$ 3,180.27

2016 - Hourly

	Points			Step One	Step Two	Step Three	Step Four	Step Five	Step Six	Step Seven	Step Eight	Step Eight
24	756	-	800	$ 55.33	$ 56.99	$ 58.70	$ 60.46	$ 62.27	$ 64.14	$ 66.07	$ 68.05	$ 70.09
23	711		755	$ 52.20	$ 53.76	$ 55.38	$ 57.04	$ 58.75	$ 60.51	$ 62.33	$ 64.20	$ 66.12
22	666		710	$ 49.24	$ 50.72	$ 52.24	$ 53.81	$ 55.42	$ 57.09	$ 58.80	$ 60.56	$ 62.38
21	621		665	$ 46.46	$ 47.85	$ 49.29	$ 50.76	$ 52.29	$ 53.86	$ 55.47	$ 57.13	$ 58.85
20	576		620	$ 43.83	$ 45.14	$ 46.50	$ 47.89	$ 49.33	$ 50.81	$ 52.33	$ 53.90	$ 55.52
19	531		575	$ 41.35	$ 42.59	$ 43.86	$ 45.18	$ 46.54	$ 47.93	$ 49.37	$ 50.85	$ 52.38
18	488		530	$ 39.01	$ 40.18	$ 41.38	$ 42.62	$ 43.90	$ 45.22	$ 46.58	$ 47.97	$ 49.41
17	447		487	$ 36.80	$ 37.90	$ 39.04	$ 40.21	$ 41.42	$ 42.66	$ 43.94	$ 45.26	$ 46.61
16	408		446	$ 34.72	$ 35.76	$ 36.83	$ 37.94	$ 39.07	$ 40.24	$ 41.45	$ 42.70	$ 43.98
15	371		407	$ 32.75	$ 33.73	$ 34.75	$ 35.79	$ 36.86	$ 37.97	$ 39.11	$ 40.28	$ 41.49
14	336		370	$ 30.90	$ 31.82	$ 32.78	$ 33.76	$ 34.78	$ 35.82	$ 36.89	$ 38.00	$ 39.14
13	303		335	$ 29.15	$ 30.02	$ 30.92	$ 31.85	$ 32.81	$ 33.79	$ 34.80	$ 35.85	$ 36.92
12	272		302	$ 27.50	$ 28.32	$ 29.17	$ 30.05	$ 30.95	$ 31.88	$ 32.84	$ 33.82	$ 34.83
11	243		271	$ 25.94	$ 26.72	$ 27.52	$ 28.35	$ 29.20	$ 30.07	$ 30.98	$ 31.91	$ 32.86
10	216		242	$ 24.48	$ 25.21	$ 25.97	$ 26.74	$ 27.55	$ 28.37	$ 29.22	$ 30.10	$ 31.00
9	190		215	$ 23.09	$ 23.78	$ 24.50	$ 25.23	$ 25.99	$ 26.77	$ 27.57	$ 28.40	$ 29.25
8	166		189	$ 21.78	$ 22.44	$ 23.11	$ 23.80	$ 24.52	$ 25.25	$ 26.01	$ 26.79	$ 27.59
7	143		165	$ 20.55	$ 21.17	$ 21.80	$ 22.46	$ 23.13	$ 23.82	$ 24.54	$ 25.27	$ 26.03
6	121		142	$ 19.39	$ 19.97	$ 20.57	$ 21.18	$ 21.82	$ 22.47	$ 23.15	$ 23.84	$ 24.56
5	101		120	$ 18.29	$ 18.84	$ 19.40	$ 19.99	$ 20.59	$ 21.20	$ 21.84	$ 22.49	$ 23.17
4	83		100	$ 17.26	$ 17.77	$ 18.31	$ 18.86	$ 19.42	$ 20.00	$ 20.60	$ 21.22	$ 21.86
3	65		82	$ 16.28	$ 16.77	$ 17.27	$ 17.79	$ 18.32	$ 18.87	$ 19.44	$ 20.02	$ 20.62
2	49		64	$ 15.36	$ 15.82	$ 16.29	$ 16.78	$ 17.28	$ 17.80	$ 18.34	$ 18.89	$ 19.45
1	0		48	$ 14.49	$ 14.92	$ 15.37	$ 15.83	$ 16.31	$ 16.80	$ 17.30	$ 17.82	$ 18.35

Attachment B

2016 City of Arden Hills Pay Matrix (Based on 2015 Pay Scale for Employees Still on Old Plan)

2.75% COLA

2016 - Yearly

		Step One	Step Two	Step Three	Step Four	Step Five	Step Six	Step Seven	Step Eight
13		$ 102,040	$ 105,685	$ 109,331	$ 112,975	$ 116,619	$ 120,263	$ 123,908	$ 127,551
12		$ 91,599	$ 94,869	$ 98,141	$ 101,412	$ 104,684	$ 107,954	$ 111,226	$ 114,498
11		$ 82,018	$ 84,947	$ 87,874	$ 90,805	$ 93,734	$ 96,664	$ 99,592	$ 102,521
10		$ 75,119	$ 77,802	$ 80,485	$ 83,166	$ 85,850	$ 88,532	$ 91,215	$ 93,898
9		$ 67,743	$ 70,161	$ 72,579	$ 75,000	$ 77,417	$ 79,837	$ 82,258	$ 84,676
8		$ 60,364	$ 62,520	$ 64,675	$ 66,831	$ 68,987	$ 71,144	$ 73,300	$ 75,454
7		$ 56,341	$ 58,353	$ 60,364	$ 62,377	$ 64,388	$ 66,401	$ 68,411	$ 70,424
6		$ 50,304	$ 52,101	$ 53,897	$ 55,694	$ 57,489	$ 59,286	$ 61,082	$ 62,879
5		$ 45,227	$ 46,841	$ 48,455	$ 50,072	$ 51,686	$ 53,303	$ 54,916	$ 56,531
4		$ 41,585	$ 43,069	$ 44,556	$ 46,040	$ 47,524	$ 49,011	$ 50,496	$ 51,982
3		$ 36,316	$ 37,613	$ 38,911	$ 40,208	$ 41,502	$ 42,800	$ 44,098	$ 45,394
2		$ 33,058	$ 34,239	$ 35,417	$ 36,600	$ 37,781	$ 38,963	$ 40,142	$ 41,322
1		$ 30,087	$ 31,164	$ 32,238	$ 33,311	$ 34,387	$ 35,462	$ 36,535	$ 37,610

2016 - Monthly

		Step One	Step Two	Step Three	Step Four	Step Five	Step Six	Step Seven	Step Eight
13		$ 8,504	$ 8,808	$ 9,111	$ 9,415	$ 9,719	$ 10,022	$ 10,326	$ 10,630
12		$ 7,634	$ 7,906	$ 8,179	$ 8,451	$ 8,724	$ 8,997	$ 9,269	$ 9,542
11		$ 6,835	$ 7,079	$ 7,323	$ 7,568	$ 7,812	$ 8,056	$ 8,300	$ 8,544
10		$ 6,260	$ 6,484	$ 6,708	$ 6,931	$ 7,155	$ 7,378	$ 7,602	$ 7,825
9		$ 5,646	$ 5,847	$ 6,049	$ 6,250	$ 6,452	$ 6,654	$ 6,855	$ 7,057
8		$ 5,031	$ 5,210	$ 5,390	$ 5,570	$ 5,749	$ 5,929	$ 6,109	$ 6,288
7		$ 4,696	$ 4,863	$ 5,031	$ 5,199	$ 5,366	$ 5,534	$ 5,701	$ 5,869
6		$ 4,192	$ 4,342	$ 4,492	$ 4,642	$ 4,791	$ 4,941	$ 5,091	$ 5,240
5		$ 3,769	$ 3,904	$ 4,038	$ 4,173	$ 4,308	$ 4,442	$ 4,577	$ 4,711
4		$ 3,466	$ 3,590	$ 3,713	$ 3,837	$ 3,961	$ 4,085	$ 4,208	$ 4,332
3		$ 3,027	$ 3,135	$ 3,243	$ 3,351	$ 3,459	$ 3,567	$ 3,675	$ 3,783
2		$ 2,755	$ 2,854	$ 2,952	$ 3,050	$ 3,149	$ 3,247	$ 3,346	$ 3,444
1		$ 2,508	$ 2,597	$ 2,687	$ 2,776	$ 2,866	$ 2,956	$ 3,045	$ 3,135

2016 - Hourly

		Step One	Step Two	Step Three	Step Four	Step Five	Step Six	Step Seven	Step Eight
13		$ 49.06	$ 50.82	$ 52.57	$ 54.32	$ 56.07	$ 57.82	$ 59.58	$ 61.33
12		$ 44.04	$ 45.62	$ 47.19	$ 48.76	$ 50.33	$ 51.91	$ 53.48	$ 55.05
11		$ 39.44	$ 40.84	$ 42.25	$ 43.66	$ 45.07	$ 46.48	$ 47.89	$ 49.29
10		$ 36.12	$ 37.41	$ 38.70	$ 39.99	$ 41.28	$ 42.57	$ 43.86	$ 45.15
9		$ 32.57	$ 33.74	$ 34.90	$ 36.06	$ 37.22	$ 38.39	$ 39.55	$ 40.71
8		$ 29.03	$ 30.06	$ 31.10	$ 32.14	$ 33.17	$ 34.21	$ 35.25	$ 36.28
7		$ 27.09	$ 28.06	$ 29.03	$ 29.99	$ 30.96	$ 31.93	$ 32.89	$ 33.86
6		$ 24.19	$ 25.05	$ 25.92	$ 26.78	$ 27.64	$ 28.51	$ 29.37	$ 30.24
5		$ 21.75	$ 22.52	$ 23.30	$ 24.08	$ 24.85	$ 25.63	$ 26.41	$ 27.18
4		$ 20.00	$ 20.71	$ 21.43	$ 22.14	$ 22.85	$ 23.57	$ 24.28	$ 25.00
3		$ 17.46	$ 18.09	$ 18.71	$ 19.34	$ 19.96	$ 20.58	$ 21.21	$ 21.83
2		$ 15.90	$ 16.47	$ 17.03	$ 17.60	$ 18.17	$ 18.74	$ 19.30	$ 19.87
1		$ 14.47	$ 14.99	$ 15.50	$ 16.02	$ 16.54	$ 17.05	$ 17.57	$ 18.09

Attachment C

ARDEN HILLS

Parks and Recreation
2016 (Proposed) Part-Time Pay Scale

Playground Leaders/Special Event/Trip Chaperone:

Steps:	1	2	3	4	5+
	$9.00	$9.25	*$9.50	$9.75	$10.00

* Pay Rate based on qualifications and experience

Program Instructor I: **Soccer/pre-soccer; basketball; sports hour/Pee Wee sports; pre-t-ball; flag football; soccer/tball mini camp; art programs, floor hockey; volleyball Specialty crafts/ceramics; drawing; special event classes,**

Steps:	1	2	3	4	5
	$11.00	$11.25	*$11.50	$11.75	$12.00

* Pay Rate based on qualifications and experience

Program Instructor II: **Tennis, Baby-Sitting**

Steps:	1	2	3	4	5
	$13.00	$13.25	$13.50	$13.75	$14.00

Program Instructor III: **Ice skating instructor, hockey skills instructor.**

Steps:	1	2	3	4	5+
	$15.00	$15.25	$15.50	$15.75	$16.25

Program Instructor IV: **Sports Coordinator, Lead Summer Staff.**

Steps:	1	2	3	4	5+
	$13.00	$13.25	$13.50	$13.75	$14.00

Youth Umpires/Referees: **Softball Umpire per game / Soccer referee per game / Flag Football**

Steps:	1	2	3	4	5
	$13.00	$13.50	*$14.00	$14.50	$15.00

* Certified Entry

Maintenance Worker:					
Steps:	1	2	3+	4	5+
	$10.50	$11.50	$12.50	$13.50	$14.00

A pay increase will be given from step one to step two for first time employees at the Public Works Superintendant's discretion.

Ice Rink Attendants:					
Steps:	1	2	3	4	5+
	$9.00	$9.25	*$9.50	$9.75	$10.00

* Pay Rate based on qualifications and experience

Park Attendants: Adult Softball; Soccer.					
Steps:	1	2	3	4	5+
	$9.00	$9.25	*$9.50	$9.75	$10.00

* Pay Rate based on qualifications and experience

CONSENT ITEM – 6F

ARDEN HILLS

MEMORANDUM

DATE: **January 25, 2016**

TO: **Honorable Mayor and City Councilmembers**
Susan Iverson, Acting City Administrator

FROM: **John Anderson, Acting Public Works Director**

SUBJECT: **Ramsey Conservation District Shared Service Agreement**

Council Action Requested

City Council is requested to approve the Shared Service Agreement with Ramsey Conservation District for 2016 and authorize the Mayor to execute the Agreement.

Discussion/Background

Since 2009 Ramsey Conservation District has been assisting the City with inspections required by the City's Grading and Erosion Control Permits under Chapter 15, Erosion and Sediment Control Ordinance. The service provided by Ramsey Conservation District has been working very well.

Attached is the Shared Service Agreement between the City of Arden Hills and Ramsey Conservation District to continue this service through 2016. There are no changes to the Agreement from 2015 including the price which is exactly the same per hour. Staff is recommending approval of the Shared Service Agreement for 2016.

Attachment

- Attachment A: Shared Serves Agreement with Ramsey Conservation District

Attachment A

SHARED SERVICE AGREEMENT
CITY OF ARDEN HILLS
RAMSEY CONSERVATION DISTRICT

1.0 **Agreement**. This Shared Service Agreement ("Agreement") is entered into by and between the City of Arden Hills, a Minnesota Statutory City ("City"); and Ramsey Conservation District, a political subdivision in the State of Minnesota ("District").

2.0 **Authorization.** This Agreement is authorized pursuant to the provisions of Minnesota Statutes §412, Minnesota Statutes §103(C), and Minnesota Statutes §471.59.

3.0 **Purpose**. The City is requesting the District to provide personnel to perform erosion and sediment control permit inspections, reporting and enforcement services, as defined herein.

4.0 **Terms**. In consideration of the mutual undertakings herein expressed, the parties agree as follows:

A. City Responsibility. The City will:

1. Accept, process, and maintain records in connection with Grading and Erosion Control Permit ("GEC Permit") applications.

2. Collect and account for GEC Permit fees and escrows.

3. The completed GEC Permit application shall include the following information:

   a. Name, address and phone number of permittee.

   b. Description and expected duration of project.

   c. Any special considerations identified by the City.

4. Issue GEC Permit upon receipt of a positive recommendation from the District. GEC Permits shall be issued subject to compliance with approved Plans and Specifications and other conditions of approval recommended by the District or the City.

5. Authorize District to issue stop work orders where appropriate.

6. Compensate the District for services rendered at the District's hourly rate (currently $70 per hour), including services rendered by staff in connection with any litigation arising out of the issuance of a Stop Work Order at the direction of the City pursuant to the terms of this

Agreement. The City acknowledges that the District's hourly rate is adjusted annually.

7. The District shall receive mileage reimbursement at the current IRS rate.

B. District Responsibilities. The District will:

1. Provide inspections by qualified staff. Unless otherwise requested by the City, inspections shall be conducted during regular business hours, 8:00 AM – 4:30 PM, Monday to Friday, excluding State holidays.

2. Provide the following regular inspections for the sites identified by the City:

   a. Initial Best Management Practice inspection prior to site disturbance, as scheduled by the City.

   b. Weekly inspections during the period of site disturbance.

   c. Routine inspections after a 0.5-inch rainfall event.

   d. Re-inspection to verify that corrections have been made, as required by the City.

3. Provide the City with a copy of the inspection report within seventy-two (72) hours of the inspection. If a re-inspection identifies that corrections have not been made and enforcement action is needed, the District shall notify the City as soon as possible of the violation but, in all cases, within twenty-four (24) hours of the re-inspection.

4. Issue stop work orders, as directed by the City, in those cases where GEC Permittees have not complied with the erosion and sediment control regulations and/or with the conditions attached to the GEC Permit.

5. Invoice the City for services rendered on a quarterly basis.

5.0 **Indemnification**. The City shall indemnify, defend and hold harmless the District for any damages to third parties arising out of services provided by the District pursuant to the terms of this Agreement provided, however, that the City's maximum liability shall be as stated in Minnesota Statutes §466.

6.0 **Amendment**. This Agreement may not be amended without the written consent of each of the parties.

7.0 **Termination**. This Agreement shall be binding upon the parties from its effective date until December 31, 2016 provided that either party may terminate this Agreement upon sixty (60) days written notice to the other party.

8.0 **Effective Date**. This Agreement shall become effective upon the execution by each of the parties.

IN WITNESS WHEREOF, the City and the District have caused this Agreement to be executed as of the date and year first above written.

CITY OF ARDEN HILLS,
a Minnesota statutory city

_____

David Grant, MAYOR

RAMSEY CONSERVATION DISTRICT, a political subdivision

By: _____

Printed Name: Mara Humphrey

Title: RCD Board Chair

Arden Hills\Forms\Shared Service Agr 2016.doc

CONSENT ITEM – 6G

ARDEN HILLS

MEMORANDUM

DATE: January 25, 2016

TO: Honorable Mayor and City Councilmembers
Sue Iverson, Acting City Administrator/Director of Finance and Admin Services

FROM: Dave Perrault, Finance Analyst

SUBJECT: Lake Johanna Fire Department Capital Expenditures

Budgeted Amount:	Actual Amount:	Funding Source:
$7,288.23	$6,991.42	Public Safety Capital

Background

The City has received two invoices from the Lake Johanna Fire Department (LJFD) for capital expenditures in 2015 (Attachment A). These invoices relate to capital equipment expenditures which were included and approved in the 2015 budget.

The total LJFD budgeted cost for these items was $29,270 and the actual cost is $28,078. Arden Hills' budget share for these items in the Public Safety Capital account was $7,288.23 (or 24.9%) and the actual cost is $6,991.42.

Invoice #542 is for the replacement of training aids (General Equipment). The Arden Hills budget for this expenditure was $996. Our actual expenditure is $954.17.

Invoice #545 is for station maintenance (Station Capital). The Arden Hills budget for this expenditure was $6,292.23. Our actual expenditure is $6,037.25.

Council Action Requested

1. Motion to approve a payment in the amount of $6,991.42 to the Lake Johanna Fire Department, which is the City's share of the capital expenditures for the replacement of training aids and station maintenance.

Attachment

Attachment A: Invoice #542 and Invoice #545

Lake Johanna Fire Dept. Inc.
Shoreview, MN 55126
5545 Lexington Ave. No.

Invoice

Date	Invoice #
12/31/2015	545

Bill To
City of Arden Hills 1245 West Highway 96 Arden Hills, MN 55112

RECEIVED
JAN 13 2016
City of Arden Hills

P.O. No.	Terms	Project
Per Capitol Budget	DUE UPON RECIEPT	

Quantity	Description	Rate	Amount
1	Reimbursement of Capital Expense Station Items re-budget request- 2015 Station Capital Budget - copy of budget request attached This is 24.9% of $24,246.00.	6,037.25	6,037.25
	THANK YOU!	**Total**	$6,037.25

LAKE JOHANNA FIRE RESCUE 1943 MN SHOREVIEW ARDEN HILLS NORTH OAKS

8. **Capital Budget Request-** In this year's approved Capital budget there was $14,000 budgeted to repaint the bay wall at station 120, and Replace carpeting at station 130 for $15,000. I am requesting to use $25,270 of the budgeted $29,000 be used for the following more pressing items located at all four fire stations:

Station 110-

Repair Epoxy floor	$ 300
Repaint peeling garage door	$ 235
Repaint North side of Station 1 ½	$ 815
Total:	**$1,350**

Station 120-

Misc. Painting, doors, kitchen	$ 1,055
Replace 5 Windows (north side)	$ 11,500
Replace Exterior Door to bay	$ 2,000
Replace bathroom countertops	$ 3,750
Total:	**$18,305**

Station 130-

Paint exterior block around sta.	$1,600
Repaint bathroom doors/frames	$ 200
Touch up paint hose tower	$ 115
Replace exterior Training door	$ 2000
Repaint Entry doors to bays	$ 200
Total:	**$4,115**

Station 140-

Repaint Hallway door to bay	$ 185
Repaint exterior window	$ 155
Repaint exterior OH door frames	$ 670
Repaint SCBA room	$ 375
Repaint Exterior door to bay	$ 115
Total:	**$1,500**

Grand Total: $25,270

9. **Auto Aid to Vadnais Heights-** On Tuesday May 12th we were dispatched to Vadnais Heights for a Structure fire as part of the Auto Aid agreement. The house was located on Rosebriar Ave. about 3 blocks south of Hwy 96. One of our Shift Engines arrived on scene in 6 minutes as the first unit and reported a working fire; our other shift crew along with myself arrived before Vadnias Heights and we began a fire attack. Our crews were able to make a quick knock down on a fast spreading fire. Vadnais Heights Engines arrived and supported the fire attack. Crews were able to save most of the possessions for the family of 8 who lived there.

Respectfully Submitted

Tim Boehlke, Fire Chief

- The Department's Fire Marshal Rick Current recently resigned and took a similar position with the city of Fridley. He quickly posted the position, accepted applications and had a team interview applicants for the position. He indicated that after the process, he has appointed Nate Berg, who is a current member of the Department, to the Fire Marshal position.

- There was a major house fire on Pinewood Drive in Shoreview. The fire resulted in a near total loss of the structure, but the firefighters did a great job containing the fire at a neighboring house where the fire had spread.

- The Department was in the process of hiring five new firefighters. All five have previous firefighter experience. Four of them have worked for the Vadnais Heights Fire Department and one of them has worked at White Bear Lake Department.

- Firefighter Tom Inwood will be retiring on May 31st since he reaches the Department's mandatory retirement age of 70.

- Two firefighters, Dan Galvin and Andy Leach, were recently granted leave of absences at their request.

- The Department has been moving forward with their plans to implement full 24/7 shift coverage beginning July 1, 2015. It has been a lengthy but worthwhile process that has greatly improved service to residents.

- Boehlke outlined several requested changes in the capital budget that would allow the Department to address more pressing needs at each of the stations. He indicated that he would delay repainting the bay walls at Station 120 and replacing carpeting at Station 130. The proposed changes would be within the capital budget allocation for these two projects. The Board was comfortable with the reallocations in the capital budget.

- The Department responded to an auto-aid structure fire in Vadnais Heights and was the first unit on the scene. The crews knocked down the fire and helped save many of the possessions in the house.

8. UNFINISHED BUSINESS

None.

9. OLD BUSINESS

None.

10. NEW BUSINESS

A. REVIEW OF 2016 OPERATING BUDGET

Lake Johanna Fire Dept. Inc.
Shoreview, MN 55126
5545 Lexington Ave. No.

Invoice

Date	Invoice #
12/31/2015	542

Bill To
City of Arden Hills 1245 West Highway 96 Arden Hills, MN 55112

RECEIVED
JAN 11 2016
City of Arden Hi

P.O. No.	Terms	Project
Per Capitol Budget	DUE UPON RECIEPT	

Quantity	Description	Rate	Amount
1	Reimbursement of Capital Expense Rescue Randy/Training Aids- Line item #1 - 2015 General Equipment Budget This is 24.9% of the total $3,832.	954.17	954.17
	THANK YOU!	**Total**	$954.17

AGENDA ITEM – 6H

ARDEN HILLS

MEMORANDUM

DATE: January 25, 2016

TO: Honorable Mayor and City Councilmembers
Sue Iverson, Acting City Administrator

FROM: Jill Hutmacher, Community Development Director

SUBJECT: Rice Creek Commons (TCAAP) Goals and Metrics

Requested Action
Approve the Rice Creek Commons Goals and Metrics document.

Discussion
On January 11 and 13, 2016, the City Council met to discuss and draft a Rice Creek Commons Goals and Metrics document. The goals and metrics are based upon goals established by the approved TCAAP Redevelopment Code and the City's Comprehensive Plan.

The City's Goals and Metrics document will be attached to the *Solicitation for Master Developer* that will be released on February 1, 2016.

Economic Development Commission
Draft 2016 Work Plan

2016 EDC Goals	Work Tasks	Timeline
New Member Recruitment	Promote membership at business visits	Q1 – Q4
	Contact Arden Hills business associates	Q1 – Q4
Business Retention and Expansion (BRE) Program	Analyze findings of the BRE Program	Q1
	Communicate program findings to the EDA and community	Q1 – Q2
	Work with EDA to identify and execute action items	Q2 – Q4
Revolving Loan Fund	Reevaluate program goals	Q2 – Q3
	Consider costs of underwriting and administration in comparison to program fund and goals	Q2 – Q3
	Consider findings of the BRE Program	Q2 – Q3
	Make recommendations to the EDA	Q3 – Q4
Marketing and Outreach	Work with the Communications Committee on business-focused articles	Q1 – Q4
	Plan and promote State of the City events	Q2 – Q3
	Work with staff to plan additional small business outreach events	Q1 – Q4
	Expand and update business contact list	Q1 – Q4
	Visit new and existing businesses	Q1 – Q4